PRO-AV CATALOGUE

2022-2023

For almost 50 years, Vogel's has been developing innovative, reliable and user-friendly mounting solutions for both the consumer and professional markets. Solutions that excel in design, safety and ease of installation. So you never choose just any mounting solution. You choose the certainty of the best solution.

Vogel's. For Sure.

TABLE OF CONTENTS

Unique Product Development Centre.....5
Why Vogel's?.....6
Vogel's. For Tomorrow.....7
Quality guaranteed 8
Pro-AV Mount Advisor.....9
Vogel's Connect-it 10
Connect-it Wall - accessories 20
Connect-it Ceiling Mounts.....22
PUC 21 Series.....23
PUC 24 Series 26
PUC 24 Series - Ceiling Kits.....27
PUC 24 Series - accessories.....33
PUC 25 Series.....34
PUC 25 Series - Ceiling Kits - fixed 35
PUC 25 Series - Ceiling Kits - turn 36
PUC 25 Series - Ceiling Kits - double pole.....37
PUC 25 Series - accessories 43
Height adjustable Ceiling Mounts.....46
Connect-it Floor solutions.....48
PUC 27 Series - Kits Floor Stand single pole....50
PUC 27 Series - Kits Floor Stand double pole..51
PUC 27 Series - Kits floor mounted.....53
PUC 27 Series - Kits Trolley single pole.....54
PUC 27 Series - Kits Trolley double pole.....56
PUC 27 Series - Back Covers.....62
PUC 27 Series - accessories.....65
Universal Video Wall solutions 70
PUC 29 Series - Kits Floor Stand.....71
PUC 29 Series - Kits Trolley.....72
PUC 29 Series - Kits floor mounted.....73
PUC 29 Series - Kits floor to ceiling.....74
PUC 29 Series - kits ceiling.....75
PUC 29 Series - accessories.....83
LED Wall solutions.....86
Barco UniSee® and TruePix solutions.....91
PFW 1000 Series Wall Mounts 92
PFW 2000 Series Wall Mounts.....94
PFW 3000 Series Wall Mounts.....96
PFW 4000 Series Wall Mounts.....98
PFW 6000 Series Wall Mounts.....101
Video Wall Pop-out Mounts + Connect-it.....104
Video Wall Pop-out Mounts - Kits.....105
Motorized Trolley for LED and LCD.....107
Motorized Trolley - LED Kits.....109
Video Conferencing Furniture.....112
Video Conferencing Speakers.....114
Solution for Samsung OMN-D Series.....116
Trolleys and Stands.....118
Trolleys and Stand - PlasmaBoy® 121
Stainless steel Floor Stands 122
Stainless steel - Kits Floor Stand.....123
Stainless steel - Kits floor mounted 124
Outdoor solutions for LG XE4F Series.....127
LG Outdoor - Kits Floor Stand.....128
LG Outdoor - Kits Wall.....129
Monitor Mounts.....133
TabLock® Tablet Holders 136
Universal TabLock® 138
Projector Lift Systems.....142
Projector Ceiling Mounts.....148
Index.....154

Unique Product Development Centre

In-house development

All Vogel's products are developed in-house. Over the years our mechanical Engineers and Product Designers have gained a lot of knowledge and experience in the field of AV installations.

This is bundled at one location in 's-Hertogenbosch, the Netherlands. We are proud to report that our Product Development Centre (PDC) is one of the most extensive R&D departments in Europe in the field of AV mounting solutions for the B2B market.

Specialized team

Based on many years of experience in the development and installation of AV equipment, we offer advice and support for all kind of projects, such as complex video wall installations.

Where necessary, we even provide on-site advice. Our specialized team of Engineers and Product Designers is ready to assist you with optimal product support and service!

Why Vogel's?

The best solution

In our Product Development Centre, we develop products that fully meet the wishes of the end user and those of the installer. This is the starting point of any new product development process at Vogel's. What do we add to that? Future proof design. So that, even after many years of intensive use, the end user is as happy as ever with it.

The best materials

At Vogel's, we don't compromise on quality. You have to be confident that you have bought a very strong, solid and sustainable product. For us, quality is key in every step of the design process.

Maximum safety

Vogel's products are almost always TÜV-certified. An independent guarantee that you have an absolutely safe product. We test many products for the professional market at five times the maximum weight capacity.

Quick and easy installation

Every Vogel's product is designed for easy mounting. As an installer, this saves you a lot of time, especially on large projects.

Service and support

As easy as our solutions are to install, sometimes extra support is needed. In corporate environments, you also encounter complex and large installation challenges. Our engineers and product designers have a great deal of experience and are happy to offer you expert advice.

Vogel's. For Tomorrow.

As a market leader and innovator, we like to lead the way with high-quality products. We are always looking for the ultimate solution. **Corporate Social Responsibility** is part of this. Respect for people and the environment is an important value to us. And we act accordingly.

People

Investing in people is investing in the future. This includes being a good employer and doing business fairly. Important themes that have already brought us a lot.

Planet

As a market leader, we want the production and consumption of our products to be as responsible as possible. This includes reducing our carbon footprint, which is an ongoing process.

Profit

As a part of society, we like to do our bit. Vogel's feels involved and likes to make a positive contribution to the local economy and community.

Sustainable packaging

For our latest product lines we developed fully recyclable packaging. We use 95% less single-use plastics and all EPS (Styrofoam) has been replaced by paper pulp.

Raw materials and production process

We apply strict environmental guidelines to our production process. We also look carefully at the origin of our raw materials. In order to leave these raw materials undamaged as much as possible, we strive for high quality products with a long lifespan.

Quality guaranteed

TÜV NORD

The TÜV NORD label is an additional confirmation that Vogel's products are safe. All Vogel's products for the consumer market and the professional market are tested thoroughly, so they meet the strict requirements of this certification agency. TÜV NORD is an independent certification authority for products and manufacturing processes. They carry out independent quality and safety tests and are recognized globally as the label of excellent quality.

Almost all Vogel's products carry the TÜV NORD label. Vogel’s has this voluntary certification carried out as additional proof that its products are safe. Part of this process is an accelerated sustainability test.

All certified products for professional use are tested to carry at least five times the indicated weight without collapsing (deformation is possible).

fischer® mounting materials

Professionals around the world trust the innovative products, materials and services by fischer® for mounting solutions. We have chosen the fischer wall plugs because of their great expertise and proven solidity. This is reflected in the high quality of their products and possibilities for different wall types.

Pro-AV Mount Advisor

Find the exact solution you need

Vogel's has developed the Pro-AV Mount Advisor. The product range of Vogel's consists of an extensive number of (modular) products. It is possible to compose a solution for nearly every application.

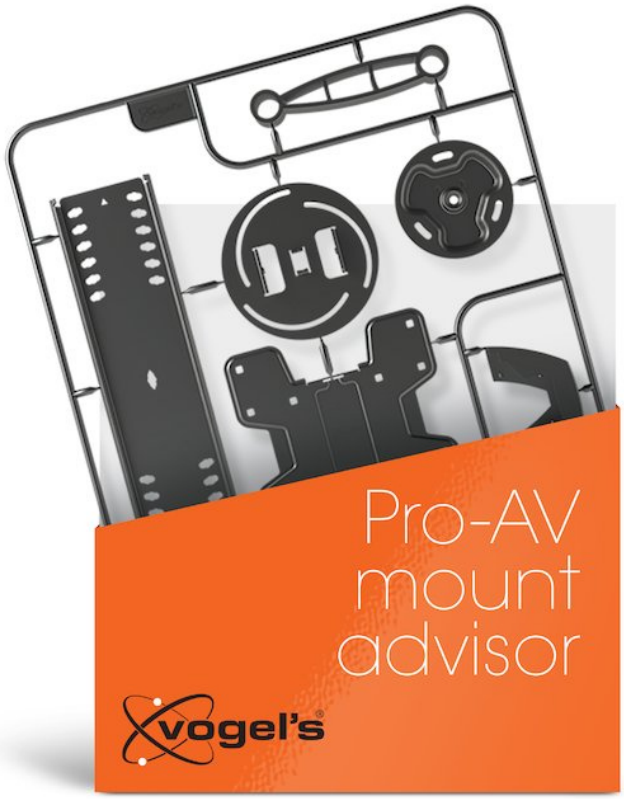

Check out the Pro-AV Mount Advisor on the Vogel's website: **vogels.com/pro-avmountadvisor**

So many mounting options,
unlimited solutions…
Configure your solution in just
a few easy steps!

Vogel's Connect-it

Limited components, unlimited possibilities

Vogel's Connect-it modular concept consists of a complete range of universal wall-, ceiling- and floor solutions for all kind of displays.

The modularity of Connect-it is unique. With only a few standard components you can create solutions for almost every situation. From basic, single display solutions to more complex, multiple display solutions such as back-to-back, side-by-side, floor to ceiling and even all kind of video walls.

Universal display interface for multiple solutions

The modular display interface consists of two separate components: an interface bar and a set of two display interface strips. The interface bar is for the horizontal display fitment and the display interface strips are for the vertical fitment. The combination of bars and strips creates the perfect fitment for any display.

Whether you require a wall solution, ceiling solution, a floor solution or a video wall solution, a Connect-it display interface is needed.

Connect-it Wall Mounts

A Connect-it wall mount consists of two separate components: a display interface bar and two display interface strips. The interface bar is for the horizontal display fitment and the display interface strips are for the vertical fitment.

Display Interface Bars

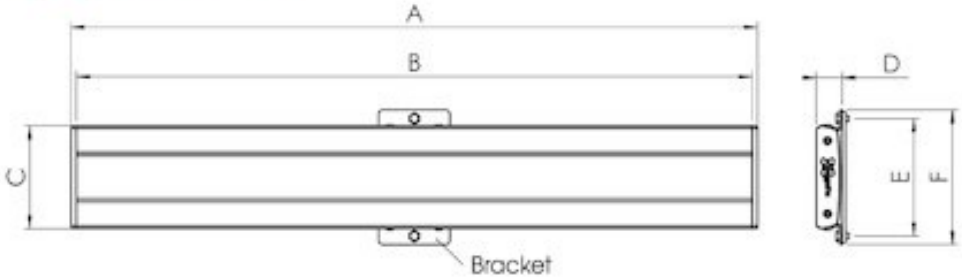

A Total product width
B Aluminium bar width
C Bar height
D Bar depth
E Distance between fixing holes
F Height of bar with bracket

	Dimensions (mm)						Max. horizontal fitment			Depth of bar including strip			Brackets	Max. weight (kg)
	A	B	C	D	E	F	PFS 32xx	PFS 33xx	PFS 35xx	PFS 32xx	PFS 33xx	PFS 35xx		
PFB 3402	290	275	137	35	157	180	225	225	310	67	67	73-90	1	80
PFB 3405	515	500	137	35	157	180	450	450	535	67	67	73-90	1	80
PFB 3407	715	700	137	35	157	180	650	650	735	67	67	73-90	1	80
PFB 3409	915	900	137	35	157	180	850	850	935	67	67	73-90	1	80
PFB 3411	1175	1160	137	35	157	180	1110	1110	1195	67	67	73-90	2	160
PFB 3419	1915	1900	137	35	157	180	1850	1850	1935	67	67	73-90	3	160
PFB 3427	2765	2750	137	35	157	180	2700	2700	2785	67	67	73-90	3	160
PFB 3433	3315	3300	137	35	157	180	3250	3250	3335	67	67	73-90	3	160

Display Interface Strips

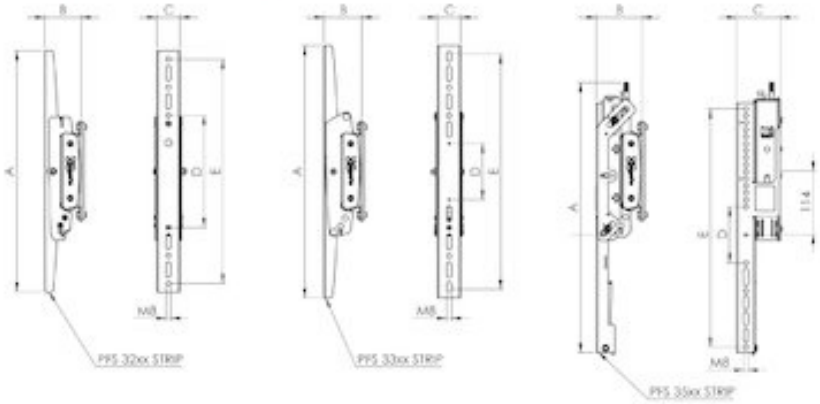

A Strip height
B Depth of strip and bar
C Strip width
D Min. fitment
E Max. fitment

	Strips	Dimensions (mm)			Min. fitment	Max.fitment	Tilt °	Max. weight (kg)
		A	B	C	D	E		
160 kg strips	PFS 3204	430	67	41	200	400	+3/0/-3	80
	PFS 3208	830	67	41	200	800	+3/0/-3	80
Tilt strips	PFS 3302	295	67	41	75	270	+20/+15/+10/0	80
	PFS 3304	450	67	41	100	420	+20/+15/+10/0	80
	PFS 3306	630	67	41	200	600	+20/+15/+10/0	80
	PFS 3308	830	67	41	200	800	+20/+15/+10/0	80
	PFS 3311	1130	67	41	200	1100	+20/+15/+10/0	80
Video wall strips	PFS 3504	482	73-90	79	200	400	+7/0/-3	80
	PFS 3508	857	73-90	79	200	800	+7/0/-3	80

DISPLAY INTERFACE BARS

	PFB 3402 Display Interface Bar	**PFB 3405** Display Interface Bar
Specifications		
Max. weight load on wall (kg)	53	53
Width (mm)	290	515
Min. horizontal hole pattern (mm)	100	100
Max. horizontal hole pattern (mm)	225	450
Guarantee		
TÜV certified	TÜV NORD	TÜV NORD
Guarantee	5 years	5 years
General		
Colour	Black | Silver	Black | Silver
Article number	7234020 (Black) 7234024 (Silver)	7234050 (Black) 7234054 (Silver)
EAN single box	8712285329401 (Black) 8712285323027 (Silver)	8712285329425 (Black) 8712285318764 (Silver)

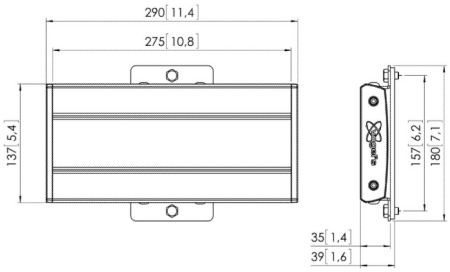

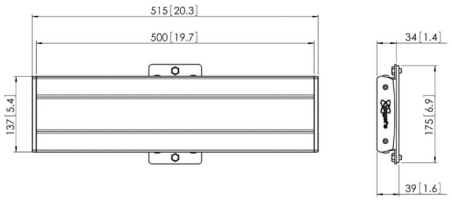

PFB 3407	PFB 3409	PFB 3411
Display Interface Bar	Display Interface Bar	Display Interface Bar
53	53	106
715	915	1175
100	100	100
650	850	1110
5 years	5 years	5 years
Black | Silver	Black | Silver	Black | Silver
7234070 (Black) 7234074 (Silver)	7234090 (Black) 7234094 (Silver)	7234110 (Black) 7234114 (Silver)
8712285329449 (Black) 8712285318788 (Silver)	8712285329463 (Black) 8712285318801 (Silver)	8712285329487 (Black) 8712285318825 (Silver)

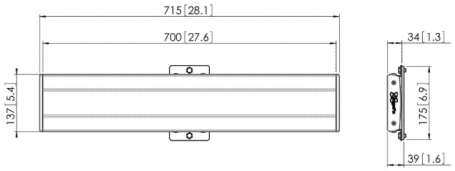

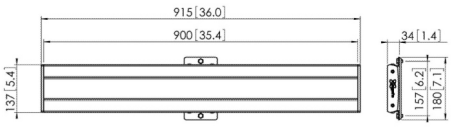

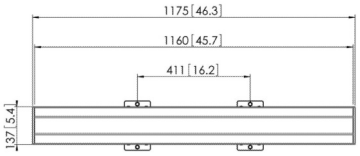

DISPLAY INTERFACE BARS

	PFB 3419 Display Interface Bar	PFB 3427 Display Interface Bar
Specifications		
Max. weight load on wall (kg)	160	160
Width (mm)	1915	2750
Min. horizontal hole pattern (mm)	100	100
Max. horizontal hole pattern (mm)	1850	2700
Guarantee		
TÜV certified	TÜV NORD	TÜV NORD
Guarantee	5 years	5 years
General		
Colour	Black | Silver	Black | Silver
Article number	7234190 (Black) 7234194 (Silver)	7234270 (Black) 7234274 (Silver)
EAN single box	8712285328749 (Black) 8712285330209 (Silver)	8712285328763 (Black) 8712285330223 (Silver)

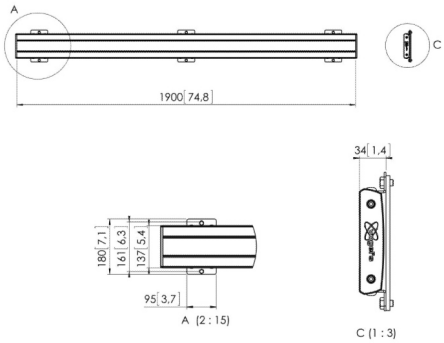

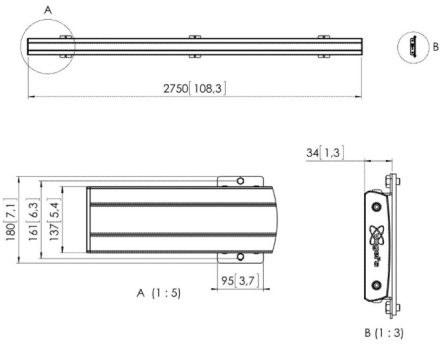

PFB 3433

Display Interface Bar

160
3300
100
3250

5 years

Black | Silver
7234330 (Black) 7234334 (Silver)
8712285328787 (Black) 8712285330247 (Silver)

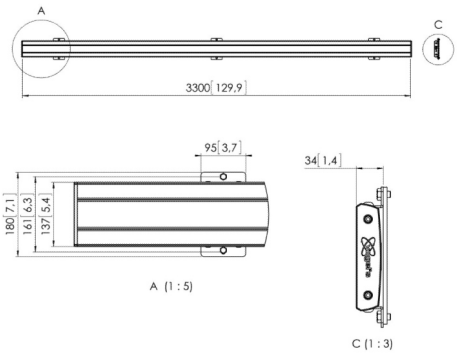

DISPLAY INTERFACE STRIPS

	PFS 3204 Display Interface Strips heavy weight	PFS 3208 Display Interface Strips heavy weight
Specifications		
Max. weight load (Lbs)	352.74	352.74
Min. vertical hole pattern (mm)	200	200
Max. vertical hole pattern (mm)	400	800
Height (mm)	430	830
Tilt	Tilt -3°/+3°	Tilt -3°/+3°
Guarantee		
TÜV certified	TÜV NORD	TÜV NORD
Guarantee	5 years	5 years
General		
Colour	Black	Black
Article number	7232040	7232080
EAN single box	8712285329302	8712285329326

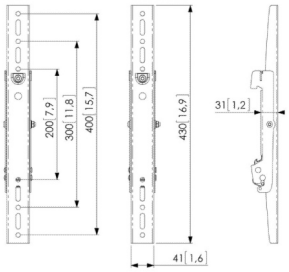

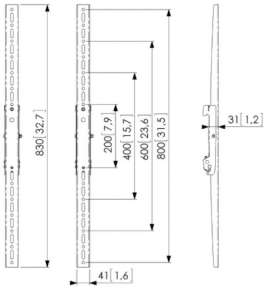

PFS 3302	PFS 3304	PFS 3306
Display Interface Strips tilt	Display Interface Strips tilt	Display Interface Strips tilt
176.37	176.37	176.37
75	100	200
270	420	600
295	450	630
Tilt up to 20°	Tilt up to 20°	Tilt up to 20°
5 years	5 years	5 years
Black	Black	Black
7233020	7233040	7233060
8712285323041	8712285318863	8712285318900
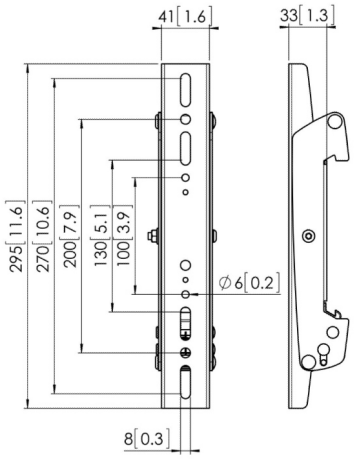	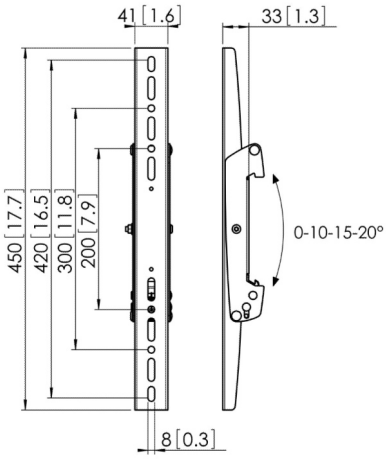	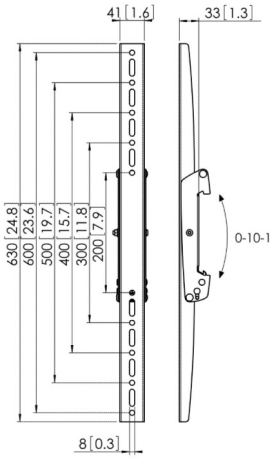

DISPLAY INTERFACE STRIPS

	PFS 3308 Display Interface Strips tilt	PFS 3311 Display Interface Strips tilt
Specifications		
Max. weight load (Lbs)	176.37	176.37
Min. vertical hole pattern (mm)	200	200
Max. vertical hole pattern (mm)	800	1100
Height (mm)	830	1130
Tilt	Tilt up to 20°	Tilt up to 20°
Guarantee		
TÜV certified	TÜV NORD	TÜV NORD
Guarantee	5 years	5 years
General		
Colour	Black	Black
Article number	7233080	7233110
EAN single box	8712285318924	8712285318948

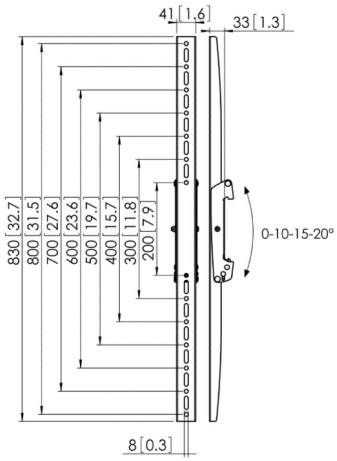

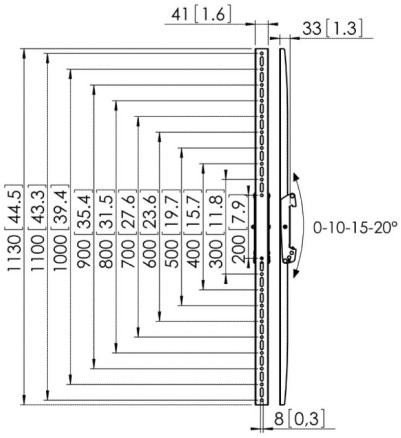

PFS 3504	PFS 3508
Display Interface Strips 3D adjustable	Display Interface Strips 3D adjustable
176.37	176.37
100	200
400	800
482	857
Tilt -3°/+7°	Tilt -3°/+7°
5 years	5 years
Black	Black
7235040	7235080
8712285328800	8712285328824
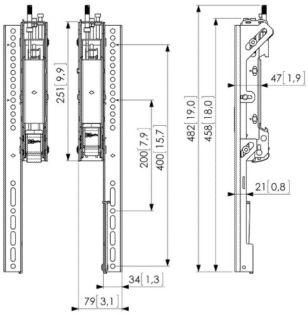	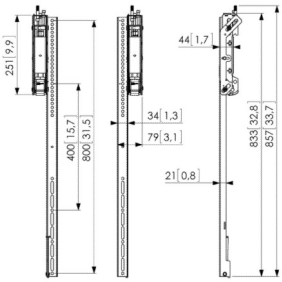

ACCESSORIES

	PFA 9104 Bar Coupler for PFB 34xx	PFA 9126 Bracket Kit for PFB 34xx	PFA 9145 Column Clamp Connect-it
	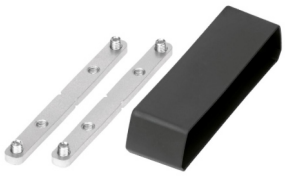	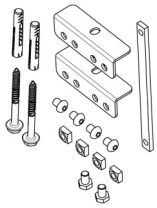	
Specifications			
Max. weight load (Lbs)			176.37
Min. screen size (inch)			
Max. screen size (inch)			
Tilt			
Exceptions | Remarks			Compatible with PFB/PFW 10xx/PFW 20xx/PFW 3030
Guarantee			
TÜV certified	TÜV NORD		TÜV NORD
Guarantee	5 years	5 years	5 years
General			
Colour	Black	Black	Black
Article number	7291040	7291260	7291450
EAN single box	8712285320743	8712285330940	8712285343407
	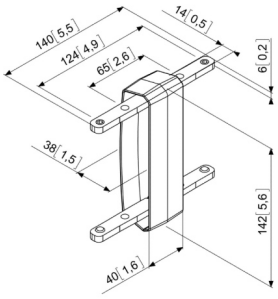	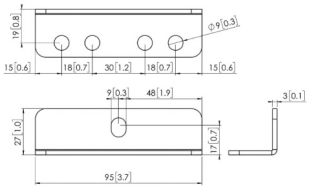	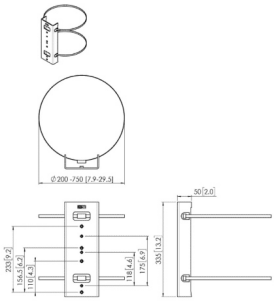

PFA 9122	PFA 9168	PFA 9109
Z-Bracket for PFS 3504	Cisco Webex Adapter	Padlock for PFS strips
176.37		
	55	
	85	
Tilt up to 8°		
5 years	5 years	5 years
Black	Black	Black
7291220	7291680	7291090
8712285328664	8712285351402	8712285321023
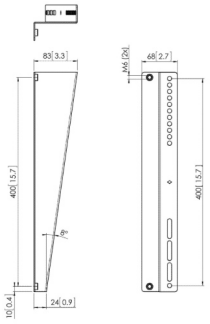	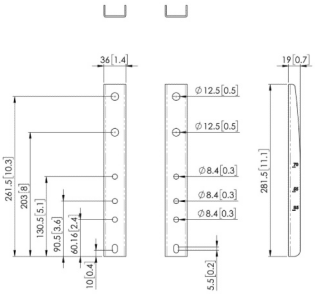	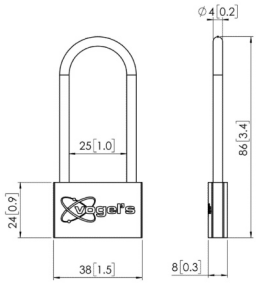

Connect-it Ceiling Mounts

Depending on the situation you choose the right ceiling plate and required pole length. The modular display interface can be selected based on the fitment of your display. With the standard Connect-it components it is also possible to create a diversity of multiple display solutions; back-to-back, side-by-side, etc. All of this including the well-known ease-of-installation features.

PUC 21/24 Series

When you need a ceiling solution (single display) for small- to medium-sized displays you can choose the PUC 21 or PUC 24 Series.

PUC 25 Series

When you are in need of a ceiling solution for medium- to large-sized displays and you want to create a diversity of multiple displays: back-to-back or side-by-side, etc. then choose the PUC 25 Series.

PUC 29 Series

Do you want to built a video wall or you need a ceiling solution for large- to XL-sized displays then choose the PUC 29 Series.

PUC 21 Series

Small- to medium-sized displays

The PUC 21 Series is part of the modular Connect-it system with which you can create a ceiling solution. The ceiling plate allows you to install the mount to any flat ceiling. The round shape of the poles makes the PUC 21 Series perfectly suitable for suspended ceilings. The poles are equipped with a CIS® Cable Inlay System, which ensures that all cables are concealed.

Display mounting

For small VESA sizes up to 200x200 mm, there are two special display interfaces with a step-by-step tilt function (see page 32). These interfaces are also compatible with the PUC 24 Series poles.

Key features

- Quick and easy to install
- Aluminium, easy to cut to length
- TÜV-5 certified
- Compatible with projector mounts PPC 1500/2500 (see page 173)

PUC 21 Series contains:

- Ceiling plates for flat ceilings
- Poles (three lengths)
- Small display interfaces (see page 32)
- Accessories

CEILING PLATE AND POLES

	PUC 1011 Ceiling Plate fixed	PUC 2108 Pole
Specifications		
Max. weight load (Lbs)	66.14	66.14
Length (mm)		800
Ceiling types	Flat ceiling	
Guarantee		
TÜV certified	TÜV NORD	TÜV NORD
Guarantee	5 years	5 years
General		
Colour	Black	Silver
Article number	7210110	7221084
EAN single box	8712285319365	8712285317149

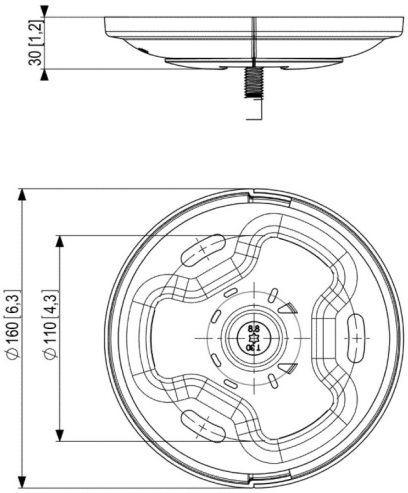

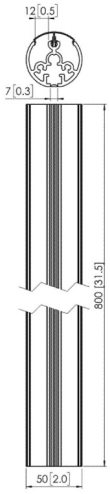

PUC 2115	PUC 2130
Pole	Pole
66.14	66.14
1500	3000
5 years	5 years
Silver	Silver
7221154	7221304
8712285317163	8712285317187
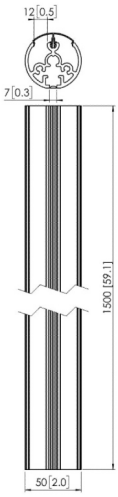	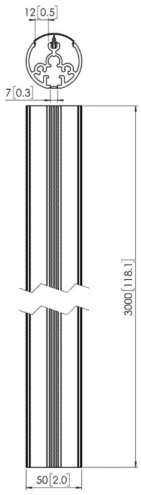

PUC 24 Series

Small- to medium-sized displays

The PUC 24 Series is part of the modular Connect-it system with which you can create a ceiling solution for small- to medium-sized displays.

Thanks to its round shape and the 360° turn function, a suspended ceiling can also be completed quickly and professionally. The tilt function in the ceiling plate ensures that the support can also be mounted to inclined ceilings. All existing Connect-it accessories can be used with the PUC 24 Series. The innovative nut channel now makes it easy to add accessories after installation. The PUC 24 Series is also equipped with a CIS® Cable Inlay System.

The PUC 24 poles are available in different lengths and are easy to shorten.

Display mounting

For small VESA sizes, Vogel's has developed two special display interfaces with a step-by-step tilt function. For large VESA sizes, it is possible to use the conventional display interface bars and display interface strips from the modular Connect-it system (see page 11-19).

Key features

- Quick and easy to install
- Strong and flexible options for use
- Add accessories after installation
- TÜV-5 certified

PUC 24 Series contains:

- Ceiling plate and truss adapter
- Poles (compatible with PPC 1500/2500)
- Small display interfaces
- Display interface bars and strips
- Accessories
- PUC 24 ceiling kits

CEILING KITS

	CT240811 Ceiling Mount turn	CT241511 Ceiling Mount turn	CT242211 Ceiling Mount turn	CT243011 Ceiling Mount turn
Specifications				
Max. weight load (Lbs)	66.14	66.14	66.14	66.14
Max. distance to ceiling - center display (mm)	1009	1709	2409	3209
Min./ Max. screen size (inch)	10 / 32	10 / 32	10 / 32	10 / 32
Ceiling types	Flat / inclined ceiling	Flat / inclined ceiling	Flat / inclined ceiling	Flat / inclined ceiling
Turn	Up to 360°	Up to 360°	Up to 360°	Up to 360°
Tilt	Tilt up to 20°	Tilt up to 20°	Tilt up to 20°	Tilt up to 20°
Min. VESA hole pattern (mm)	50 x 50	50 x 50	50 x 50	50 x 50
Max. VESA hole pattern (mm)	100 x 100	100 x 100	100 x 100	100 x 100
Guarantee				
TÜV certified	TÜV NORD	TÜV NORD	TÜV NORD	TÜV NORD
Guarantee	5 years	5 years	5 years	5 years
General				
Colour	Black | Silver	Black | Silver	Black | Silver	Black | Silver
Article number	7955010 (Black) 7955014 (Silver)	7955030 (Black) 7955034 (Silver)	7955060 (Black) 7955064 (Silver)	7955080 (Black) 7955084 (Silver)
	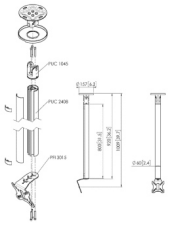	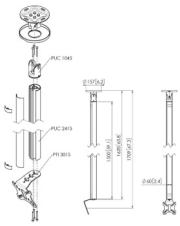	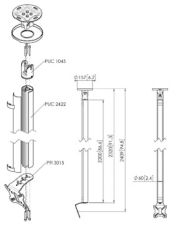	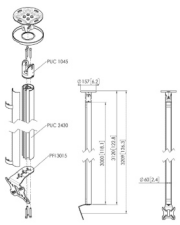

CEILING KITS

	CT240822 Ceiling Mount turn	CT241522 Ceiling Mount turn	CT242222 Ceiling Mount turn	CT243022 Ceiling Mount turn
Specifications				
Max. weight load (Lbs)	66.14	66.14	66.14	66.14
Max. distance to ceiling - center display (mm)	978	1678	2378	3178
Min./ Max. screen size (inch)	19 / 43	19 / 43	19 / 43	19 / 43
Ceiling types	Flat / inclined ceiling	Flat / inclined ceiling	Flat / inclined ceiling	Flat / inclined ceiling
Turn	Up to 360°	Up to 360°	Up to 360°	Up to 360°
Tilt	Tilt up to 20°	Tilt up to 20°	Tilt up to 20°	Tilt up to 20°
Min. VESA hole pattern (mm)	100 x 100	100 x 100	100 x 100	100 x 100
Max. VESA hole pattern (mm)	200 x 200	200 x 200	200 x 200	200 x 200
Guarantee				
TÜV certified	TÜV NORD	TÜV NORD	TÜV NORD	TÜV NORD
Guarantee	5 years	5 years	5 years	5 years
General				
Colour	Black | Silver	Black | Silver	Black | Silver	Black | Silver
Article number	7955020 (Black) 7955024 (Silver)	7955040 (Black) 7955044 (Silver)	7955070 (Black) 7955074 (Silver)	7955090 (Black) 7955094 (Silver)
	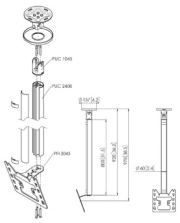	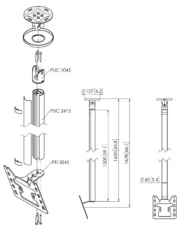	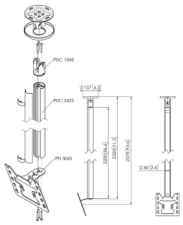	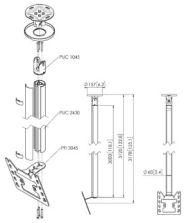

CEILING KITS

	CT240844 Ceiling Mount turn	CT241544 Ceiling Mount turn	CT242244 Ceiling Mount turn	CT243044 Ceiling Mount turn
Max. weight load (Lbs)	88.18	88.18	88.18	88.18
Max. distance to ceiling - center display (mm)	821	1521	2221	3021
Min./ Max. screen size (inch)	32 / 65	32 / 65	32 / 65	32 / 65
Ceiling types	Flat / inclined ceiling	Flat / inclined ceiling	Flat / inclined ceiling	Flat / inclined ceiling
Turn	Up to 360°	Up to 360°	Up to 360°	Up to 360°
Tilt	Tilt up to 20°	Tilt up to 20°	Tilt up to 20°	Tilt up to 20°
Min. VESA hole pattern (mm)	100 x 100	100 x 100	100 x 100	100 x 100
Max. VESA hole pattern (mm)	400 x 400	400 x 400	400 x 400	400 x 400

Guarantee

TÜV certified	TÜV NORD	TÜV NORD	TÜV NORD	TÜV NORD
Guarantee	5 years	5 years	5 years	5 years

General

Colour	Black | Silver	Black | Silver	Black | Silver	Black | Silver
Article number	7955100 (Black) 7955104 (Silver)	7955110 (Black) 7955114 (Silver)	7955120 (Black) 7955124 (Silver)	7955130 (Black) 7955134 (Silver)
	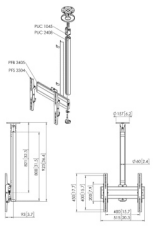	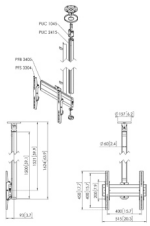	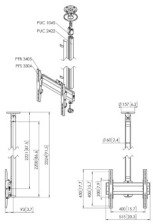	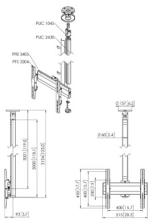

CEILING PLATES

	PUC 1045 Ceiling Plate turn & tilt	PUC 1051 Truss Adapter
Max. weight load (Lbs)	88.18	88.18
Turn	Up to 360°	
Tilt	Tilt up to 90°	
Ceiling types	Flat / inclined ceiling	Truss system
Guarantee		
TÜV certified	TÜV NORD	TÜV NORD
Guarantee	5 years	5 years
General		
Colour	Black	Stainless Steel
Article number	7210450	7210514
EAN single box	8712285343940	8712285344404

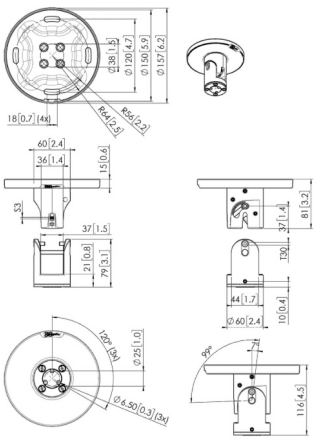

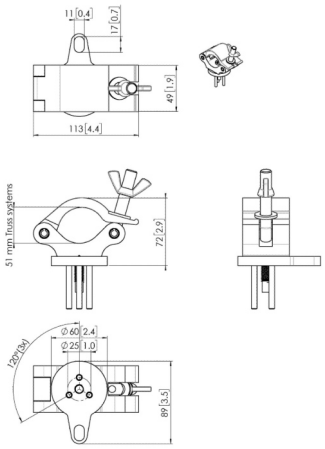

POLES

	PUC 2408 Pole	PUC 2415 Pole	PUC 2422 Pole	PUC 2430 Pole
Max. weight load (Lbs)	88.18	88.18	88.18	88.18
Length (mm)	800	1500	2200	3000
Guarantee				
TÜV certified	TÜV NORD	TÜV NORD	TÜV NORD	TÜV NORD
Guarantee	5 years	5 years	5 years	5 years
General				
Colour	Black | Silver	Black | Silver	Black | Silver	Black | Silver
Article number	7224080 (Black) 7224084 (Silver)	7224150 (Black) 7224154 (Silver)	7224220 (Black) 7224224 (Silver)	7224300 (Black) 7224304 (Silver)
EAN single box	8712285344428 (Black) 8712285344442 (Silver)	8712285344466 (Black) 8712285344480 (Silver)	8712285344503 (Black) 8712285344527 (Silver)	8712285344541 (Black) 8712285344565 (Silver)
	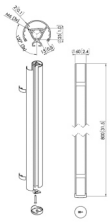	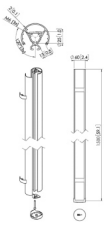	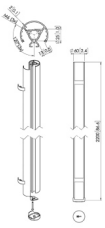	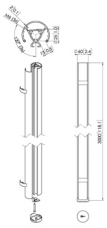

INTERFACES

	PFI 3015 Display Interface	PFI 3045 Display Interface
Max. weight load (Lbs)	66.14	66.14
Min./ Max. screen size (inch)	10 / 32	19 / 43
Tilt	Tilt up to 20°	Tilt up to 20°
Hole pattern (VESA)	50 mm x 50 mm 75 mm x 75 mm 100 mm x 100 mm	100 mm x 100 mm 200 mm x 100 mm 200 mm x 200 mm
Guarantee		
TÜV certified	TÜV NORD	TÜV NORD
Guarantee	5 years	5 years
General		
Colour	Black	Black
Article number	7230150	7230450
EAN single box	8712285343865	8712285343889

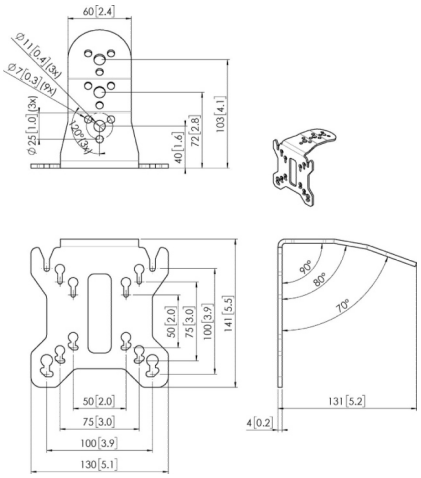

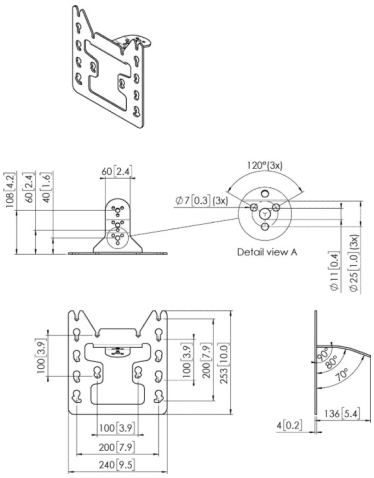

ACCESSORIES

	PUA 9515 Girder H-Beam clamp 70-180 mm	**PUA 9516** Girder H-Beam clamp 150-300 mm	**PUA 9510** Stabilization Kit for PUC 24	**PFA 9149** T-Slot Nuts
Max. weight load (Lbs)	176.37	176.37		
H-beam size	70-180 mm	150-300 mm		
Length (mm)			4000	
Guarantee				
TÜV certified	TÜV NORD	TÜV NORD	TÜV NORD	
Guarantee	5 years	5 years	5 years	5 years
General				
Colour	Black	Black	Stainless Steel	Silver
Article number	7295154	7295164	7295104	7291490
EAN single box	8712285345166	8712285345180	8712285335884	8712285345425
	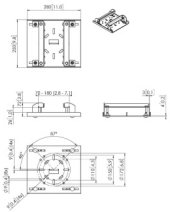	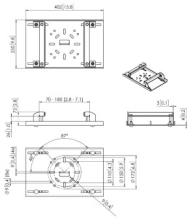	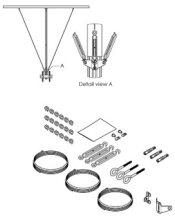	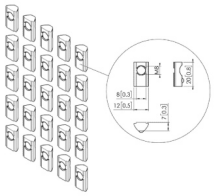

PUC 25 Series

Medium- to large-sized displays

The PUC 25 Series is part of the modular Connect-it system with which you can create a ceiling solution for medium- to large-sized displays.

The poles of the PUC 25 Series are equipped with a multiple cable inlay system with which you can quickly and simply ensure that all cables are hidden. The pole is made of aluminium and therefore, it can simply be cut at the required length.

Multiple displays can easily be installed back-to-back, on top of each other or next to each other.

Combine this pole with one of the Connect-it ceiling plates, Connect-it display interface bar and Connect-it interface strips (see page 11-19) for a complete ceiling solution.

Key features

- CIS® cable management
- Aluminium, easy to cut to length
- Multiple display mounting
- Safety end cap included

PUC 25 Series contains:

- Ceiling plates
- Poles (three lengths)
- Display interface bars and strips
- Accessories
- PUC 25 ceiling kits

CEILING KITS - FIXED

	C0844 Ceiling Mount fixed	C1544 Ceiling Mount fixed	C3044 Ceiling Mount fixed
Specifications			
Max. weight load (Lbs)	176.37	176.37	176.37
Max. distance to ceiling - center display (mm)	700	1400	2900
Max. screen size (inch)	65	65	65
Tilt	Tilt up to 20°	Tilt up to 20°	Tilt up to 20°
Ceiling types	Flat ceiling	Flat ceiling	Flat ceiling
Min. VESA hole pattern (mm)	100 x 100	100 x 100	100 x 100
Max. VESA hole pattern (mm)	450 x 420	450 x 420	450 x 420
Guarantee			
TÜV certified	TÜV NORD	TÜV NORD	TÜV NORD
Guarantee	5 years	5 years	5 years
General			
Colour	Black | Silver	Black | Silver	Black | Silver
Article number	7950010 (Black) 7950014 (Silver)	7950020 (Black) 7950024 (Silver)	7950030 (Black) 7950034 (Silver)

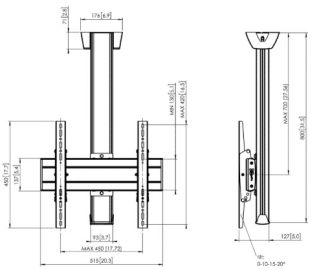

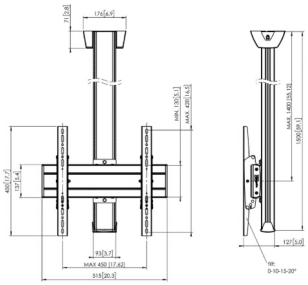

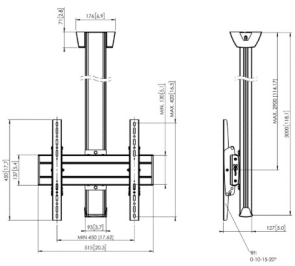

CEILING KITS - TURN

	CT0844 Ceiling Mount turn	CT1544 Ceiling Mount turn	CT3044 Ceiling Mount turn
Max. weight load (Lbs)	176.37	176.37	176.37
Max. distance to ceiling - center display (mm)	700	1400	2900
Max. screen size (inch)	65	65	65
Turn	Up to 360°	Up to 360°	Up to 360°
Tilt	Tilt up to 20°	Tilt up to 20°	Tilt up to 20°
Ceiling types	Flat ceiling	Flat ceiling	Flat ceiling
Min. VESA hole pattern (mm)	100 x 100	100 x 100	100 x 100
Max. VESA hole pattern (mm)	450 x 420	450 x 420	450 x 420
Guarantee			
TÜV certified	TÜV NORD	TÜV NORD	TÜV NORD
Guarantee	5 years	5 years	5 years
General			
Colour	Black | Silver	Black | Silver	Black | Silver
Article number	7950080 (Black) 7950084 (Silver)	7950090 (Black) 7950094 (Silver)	7950100 (Black) 7950104 (Silver)

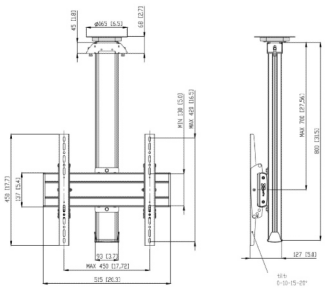

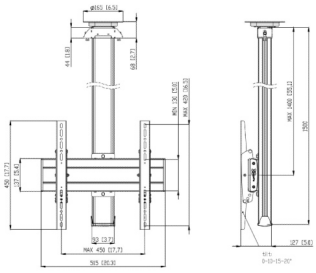

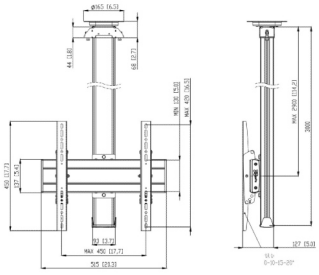

CEILING KITS - DOUBLE POLE

	CD1564 Ceiling Mount double pole	**CD3064** Ceiling Mount double pole
Max. weight load (Lbs)	352.74	352.74
Max. distance to ceiling - center display (mm)	1400	2900
Min. screen size (inch)	65	65
Tilt	Tilt -3°/+3°	Tilt -3°/+3°
Ceiling types	Flat ceiling	Flat ceiling
Min. VESA hole pattern (mm)	100 x 100	100 x 100
Max. VESA hole pattern (mm)	650 x 400	650 x 400
Guarantee		
TÜV certified	TÜV NORD	TÜV NORD
Guarantee	5 years	5 years
General		
Colour	Black | Silver	Black | Silver
Article number	7950040 (Black) 7950044 (Silver)	7950060 (Black) 7950064 (Silver)

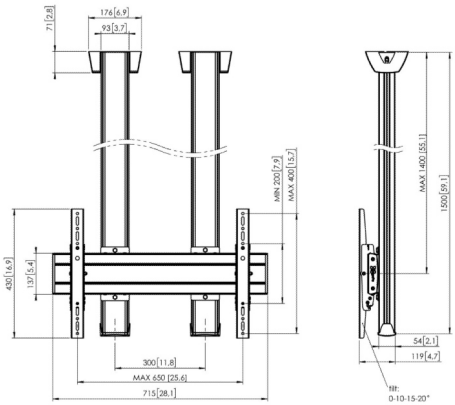

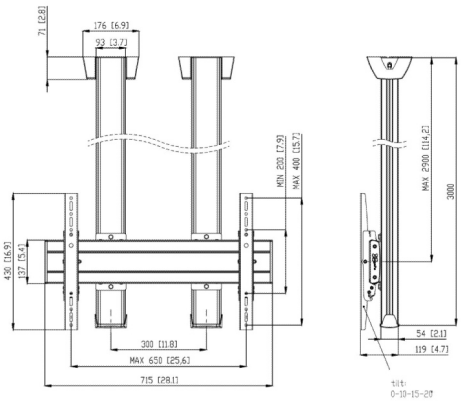

CEILING KITS - DOUBLE POLE

	CD1584 Ceiling Mount double pole	CD3084 Ceiling Mount double pole
Max. weight load (Lbs)	352.74	264.55
Max. distance to ceiling - center display (mm)	1400	2900
Min. screen size (inch)	65	65
Tilt	Tilt -3°/+3°	Tilt -3°/+3°
Ceiling types	Flat ceiling	Flat ceiling
Min. VESA hole pattern (mm)	100 x 100	100 x 100
Max. VESA hole pattern (mm)	850 x 400	850 x 400
Guarantee		
TÜV certified	TÜV NORD	TÜV NORD
Guarantee	5 years	5 years
General		
Colour	Black | Silver	Black | Silver
Article number	7950050 (Black) 7950054 (Silver)	7950070 (Black) 7950074 (Silver)

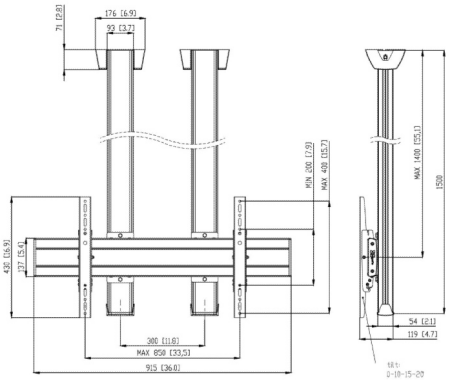

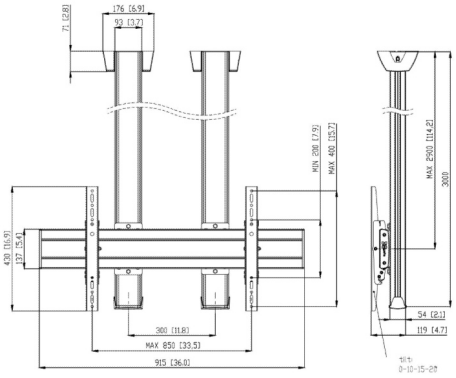

DRINKEN
SNOEP

CEILING PLATES

	PUC 1060 Ceiling Plate fixed	PUC 1065 Ceiling Plate turn	PUC 1070 Ceiling Plate tilt
	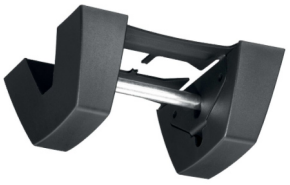		
Max. weight load (Lbs)	176.37	176.37	176.37
Turn		Up to 360°	
Tilt			Tilt up to 90°
Ceiling types	Flat ceiling	Flat ceiling	Flat / inclined ceiling
Guarantee			
TÜV certified	TÜV NORD	TÜV NORD	TÜV NORD
Guarantee	5 years	5 years	5 years
General			
Colour	Black	Black	Black
Article number	7210604	7210650	7210704
EAN single box	8712285318665	8712285324123	8712285318689

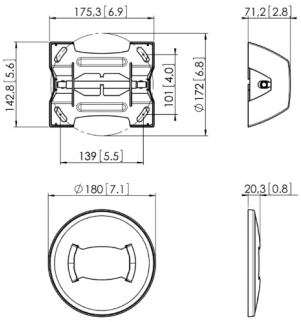

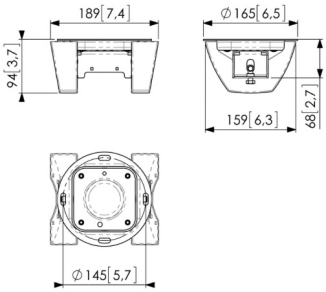

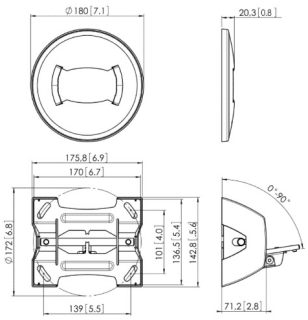

PUC 1080 Ceiling Plate turn & tilt	**PUC 1090** Truss Adapter
176.37	176.37
Up to 360°	
Tilt up to 60°	
Flat / inclined ceiling	Truss system
5 years	5 years
Black	Silver
7210804	7210904
8712285320767	8712285319389

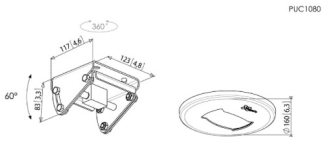

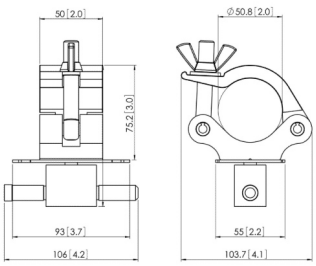

POLES

	PUC 2508 Pole	PUC 2515 Pole	PUC 2530 Pole
Specifications			
Max. weight load (Lbs)	176.37	176.37	176.37
Length (mm)	800	1500	3000
Guarantee			
TÜV certified	TÜV NORD	TÜV NORD	TÜV NORD
Guarantee	5 years	5 years	5 years
General			
Colour	Black | Silver	Black | Silver	Black | Silver
Article number	7225080 (Black) 7225084 (Silver)	7225150 (Black) 7225154 (Silver)	7225300 (Black) 7225304 (Silver)
EAN single box	8712285329340 (Black) 8712285318702 (Silver)	8712285329364 (Black) 8712285318726 (Silver)	8712285329388 (Black) 8712285318740 (Silver)

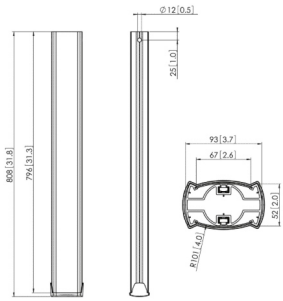

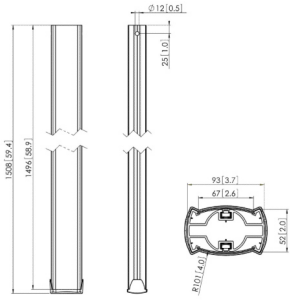

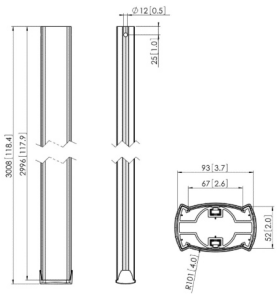

ACCESSORIES

	PUA 9507 Accessory Tray for PUC 24/25/27	PFA 9127 Accessory Clamp for PUC 24/25/27
Max. weight load (Lbs)	22.05	22.05
Length (mm)		
Guarantee		
Guarantee	5 years	5 years
General		
Colour	Black | Silver	Black
Article number	7295095 (Black) 7295094 (Silver)	7091270
EAN single box	8712285325045 (Black) 8712285321047 (Silver)	8712285331985

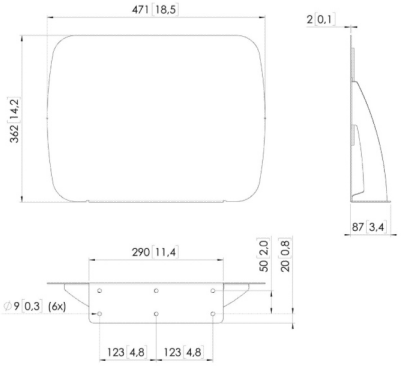

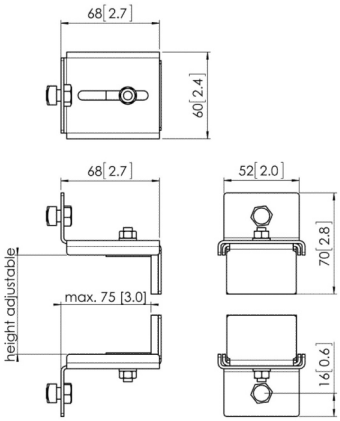

ACCESSORIES

	PFA 9103 Floor Plate for PUC 25	**PUA 9503** Pole Coupler for PUC 25
Max. weight load (Lbs)		176.37
Length (mm)		
Guarantee		
Guarantee	5 years	5 years
General		
Colour	Black	Silver
Article number	7291030	7295054
EAN single box	8712285320729	8712285319402

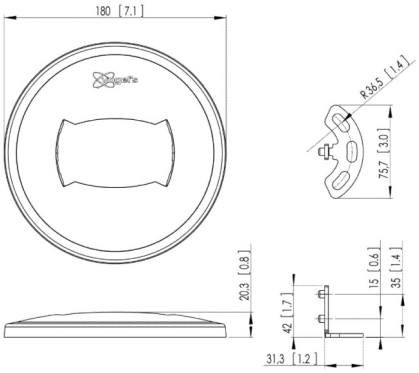

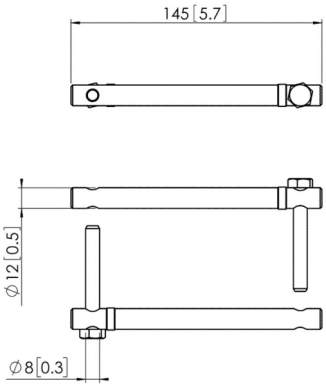

PUA 9504	PFA 9107	PFA 9108
Stabilisation Kit for PUC 25	Pole Cover for PUC 25	Ceiling Cover for PUC 25
4000		
5 years	5 years	5 years
Silver	White	White
7295064	7291071	7291081
8712285319426	8712285320989	8712285321009
	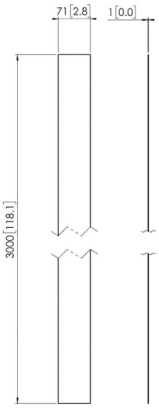	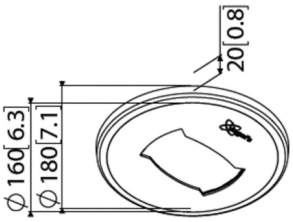

mm (inch)

Height adjustable Ceiling Mounts

Complete kits

For small displays, there are two complete ceiling mount kits available, including a universal ceiling plate, height adjustable pole and a VESA 200x200 mm display interface with tilt function.

Key features

- Adjustable in height (telescopic pole)
- For flat and inclined ceilings
- CIS® cable management
- Post-installation levelling

CEILING KITS

	PFC 555 Ceiling Mount	**PFC 585** Ceiling Mount
Max. weight load (Lbs)	44.09	44.09
Min./ Max. screen size (inch)	19 / 43	19 / 43
Min. distance to ceiling (mm)	550	830
Max. distance to ceiling - center display (mm)	810	1380
Tilt	Tilt up to 20°	Tilt up to 20°
Ceiling types	Flat / inclined ceiling	Flat / inclined ceiling
Hole pattern (VESA)	100 mm x 100 mm 200 mm x 100 mm 200 mm x 200 mm	100 mm x 100 mm 200 mm x 100 mm 200 mm x 200 mm
Guarantee		
TÜV certified	TÜV NORD	TÜV NORD
Guarantee	5 years	5 years
General		
Colour	Silver	Silver
Article number	7305554	7305854
EAN single box	8712285330742	8712285330766

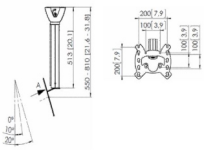

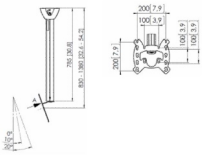

Connect-it Floor solutions

Floor Stands and Trolleys

Flexibility is the key feature of the Connect-it floor stands and trolleys, from a basic single to any imaginable multiple solution.

Creating a video conferencing trolley or stand is easy with the standard components and the wide range of accessories. With Connect-it floor you can create your own custom set-up. The length of the pole in combination with the weight and VESA of the display lead to the perfect Connect-it floor solution.

With each solution don't forget to order an interface bar and display interface strips, which depend on the screen size (see page 11-19).

Key features

- Flexible modular system
- Multiple display mounting
- Modular display interface for a perfect fit
- Extensive cable space

Floor solution Series contains:

- Floor plates
- Trolley frames
- Poles (PUC 27 Series)
- Display interface bars and -strips
- Accessories
- Connect-it floor kits

How to choose the correct floor solution?

- Choose floor stand or trolley
- Choose length of the pole
- Check the weight of your display
- Length of the pole in combination with the weight of the display determine the size of the foot plate or trolley frame

See overview for your perfect solution:

		Floor stands					Trolleys	
				Back-to-back	Floor mounted			
Pole	Length	PFF 7020	PFF 7030	PFF 7040	PFF 7060	PFF 7070	PFT 8520	PFT 8530
PUC 2715	**1,5 m**	105 kg	160 kg	2x 80 kg	(2x) 150 kg	(2x) 160 kg	105 kg	160 kg
PUC 2718	**1,8 m**	80 kg	160 kg	2x 60 kg	(2x) 150 kg	(2x) 160 kg	80 kg	160 kg
PUC 2720	**2,0 m**	60 kg	120 kg	2x 40 kg	(2x) 150 kg	(2x) 160 kg	60 kg	150 kg

FLOOR STAND KITS

	F1544 Floor Stand	F1844 Floor Stand	F2044 Floor Stand
Max. weight load (Lbs)	176.37	176.37	132.28
Height (mm)	1500	1800	2000
Max. screen size (inch)	65	65	65
Min. VESA hole pattern (mm)	100 x 100	100 x 100	100 x 100
Max. VESA hole pattern (mm)	450 x 420	450 x 420	450 x 420
Guarantee			
TÜV certified	TÜV NORD	TÜV NORD	TÜV NORD
Guarantee	5 years	5 years	5 years
General			
Colour	Black | Silver	Black | Silver	Black | Silver
Article number	7951010 (Black) 7951014 (Silver)	7951020 (Black) 7951024 (Silver)	7951030 (Black) 7951034 (Silver)

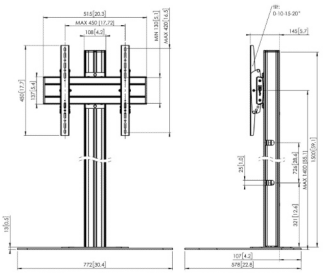

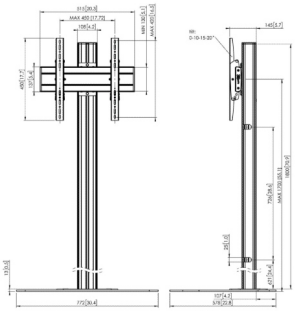

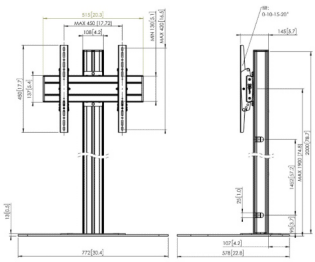

FLOOR STAND KITS

	FD1564 Floor Stand double pole	FD1864 Floor Stand double pole	FD2064 Floor Stand double pole
Specifications			
Max. weight load (Lbs)	176.37	176.37	176.37
Height (mm)	1500	1800	2000
Min. screen size (inch)	65	65	65
Min. VESA hole pattern (mm)	100 x 100	100 x 100	100 x 100
Max. VESA hole pattern (mm)	650 x 420	650 x 420	650 x 420
Guarantee			
TÜV certified	TÜV NORD	TÜV NORD	TÜV NORD
Guarantee	5 years	5 years	5 years
General			
Colour	Black | Silver	Black | Silver	Black | Silver
Article number	7951040 (Black) 7951044 (Silver)	7951060 (Black) 7951064 (Silver)	7951080 (Black) 7951084 (Silver)

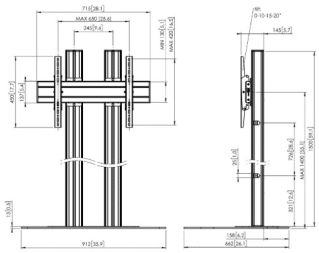

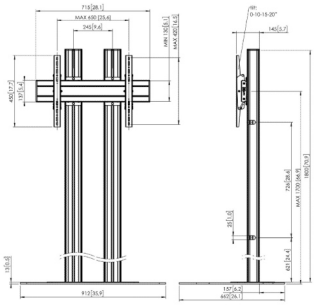

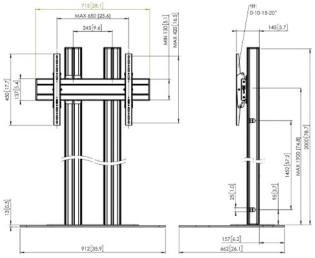

FLOOR STAND KITS

	FD1584 Floor Stand double pole	FD1884 Floor Stand double pole	FD2084 Floor Stand double pole
Specifications			
Max. weight load (Lbs)	352.74	352.74	264.55
Height (mm)	1500	1800	2000
Min. screen size (inch)	65	65	65
Min. VESA hole pattern (mm)	100 x 100	100 x 100	100 x 100
Max. VESA hole pattern (mm)	850 x 400	850 x 400	850 x 400
Guarantee			
TÜV certified	TÜV NORD	TÜV NORD	TÜV NORD
Guarantee	5 years	5 years	5 years
General			
Colour	Black | Silver	Black | Silver	Black | Silver
Article number	7951050 (Black) 7951054 (Silver)	7951070 (Black) 7951074 (Silver)	7951090 (Black) 7951094 (Silver)
	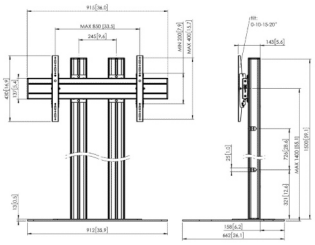	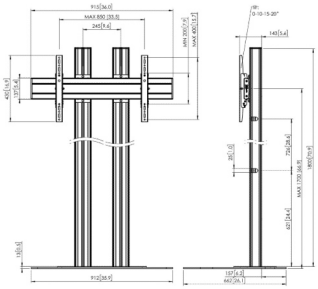	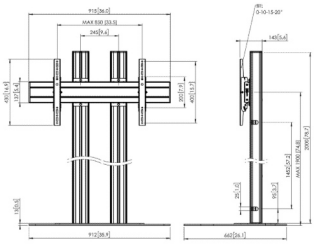

FLOOR MOUNTED KITS

	FM1544 Floor Stand, fixed to floor	FM1844 Floor Stand, fixed to floor	FM2044 Floor Stand, fixed to floor
Specifications			
Max. weight load (Lbs)	176.37	176.37	176.37
Height (mm)	1500	1800	2000
Max. screen size (inch)	65	65	65
Min. VESA hole pattern (mm)	100 x 100	100 x 100	100 x 100
Max. VESA hole pattern (mm)	420 x 450	450 x 420	450 x 420
Guarantee			
TÜV certified	TÜV NORD	TÜV NORD	TÜV NORD
Guarantee	5 years	5 years	5 years
General			
Colour	Black | Silver	Black | Silver	Black | Silver
Article number	7952010 (Black) 7952014 (Silver)	7952020 (Black) 7952024 (Silver)	7952030 (Black) 7952034 (Silver)

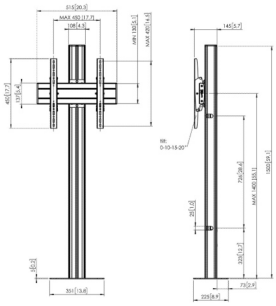

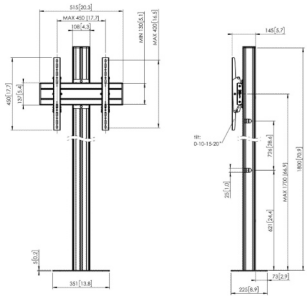

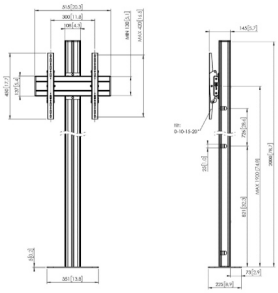

TROLLEY KITS

	T1544 Trolley	T1844 Trolley	T2044 Trolley
Specifications			
Max. weight load (Lbs)	176.37	176.37	132.28
Height (mm)	1641	1941	2141
Max. screen size (inch)	65	65	65
Min. VESA hole pattern (mm)	100 x 100	100 x 100	100 x 100
Max. VESA hole pattern (mm)	450 x 420	450 x 420	420 x 450
Guarantee			
TÜV certified	TÜV NORD	TÜV NORD	TÜV NORD
Guarantee	5 years	5 years	5 years
General			
Colour	Black | Silver	Black | Silver	Black | Silver
Article number	7953010 (Black) 7953014 (Silver)	7953020 (Black) 7953024 (Silver)	7953030 (Black) 7953034 (Silver)
	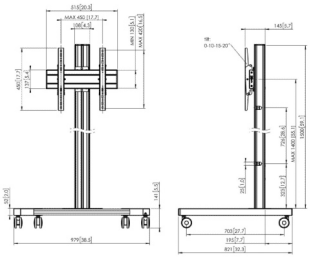	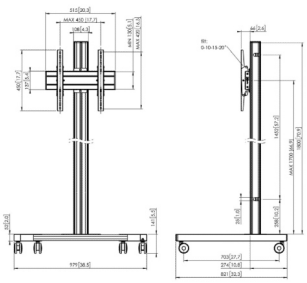	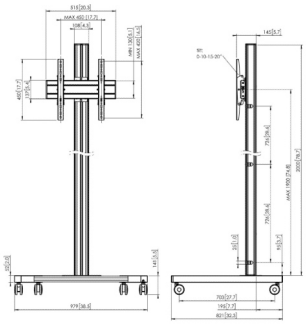

TROLLEY KITS

	TD1564 Trolley double pole	TD1864 Trolley double pole	TD2064 Trolley double pole
Specifications			
Max. weight load (Lbs)	176.37	176.37	176.37
Height (mm)	1651	1951	2151
Min. screen size (inch)	65	65	65
Min. VESA hole pattern (mm)	100 x 100	100 x 100	100 x 100
Max. VESA hole pattern (mm)	650 x 420	650 x 420	650 x 420
Guarantee			
TÜV certified	TÜV NORD	TÜV NORD	TÜV NORD
Guarantee	5 years	5 years	5 years
General			
Colour	Black | Silver	Black | Silver	Black | Silver
Article number	7953040 (Black) 7953044 (Silver)	7953060 (Black) 7953064 (Silver)	7953080 (Black) 7953084 (Silver)

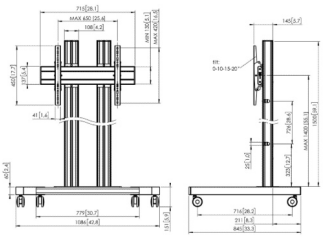

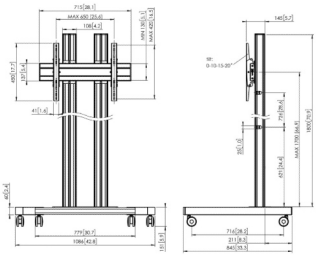

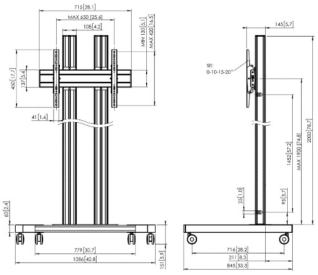

TD1584	TD1884	TD2084
Trolley double pole	Trolley double pole	Trolley double pole
352.74	352.74	330.69
1651	1951	2151
65	65	65
100 x 100	100 x 100	100 x 100
850 x 400	850 x 400	850 x 400
5 years	5 years	5 years
Black | Silver	Black | Silver	Black | Silver
7953050 (Black) 7953054 (Silver)	7953070 (Black) 7953074 (Silver)	7953090 (Black) 7953094 (Silver)
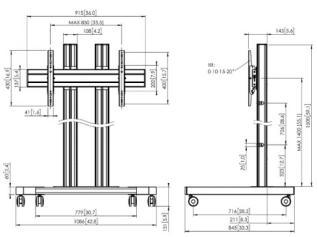	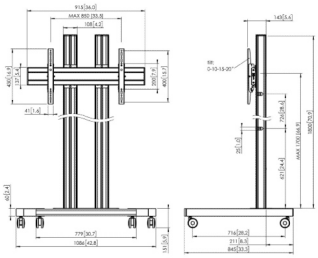	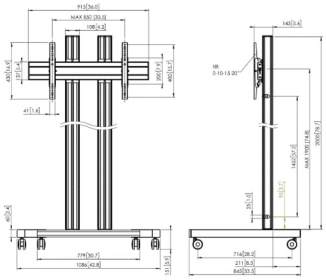

FLOOR PLATES

	PFF 7020 Floor Plate	**PFF 7030** Floor Plate
Specifications		
Width (mm)	772	912
Depth (mm)	578	662
Height (mm)	13	13
Guarantee		
TÜV certified	TÜV NORD	TÜV NORD
Guarantee	5 years	5 years
General		
Colour	Black | Silver	Black | Silver
Article number	7327020 (Black) 7327024 (Silver)	7327030 (Black) 7327034 (Silver)
EAN single box	8712285323744 (Black) 8712285323768 (Silver)	8712285323782 (Black) 8712285323805 (Silver)

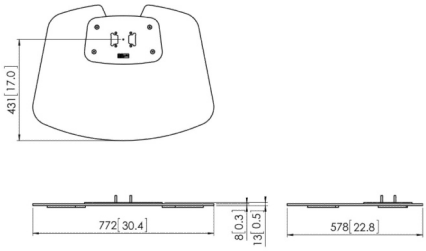

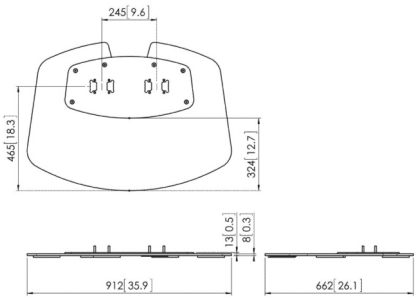

PFF 7040	PFF 7060	PFF 7070
Floor Plate back-to-back	Floor Mounting Plate	Floor Mounting Plate
		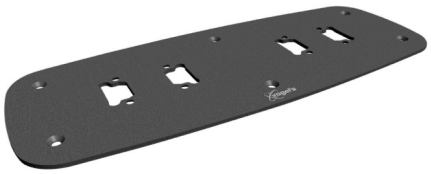
820	351	550
580	225	215
13	5	5
5 years	5 years	5 years
Black	Black | Silver	Black
7327040	7327060 (Black) 7327064 (Silver)	7327070
8712285323829	8712285323867 (Black) 8712285323881 (Silver)	8712285355004
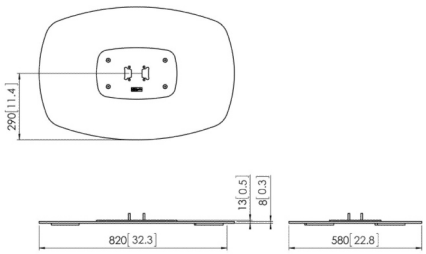	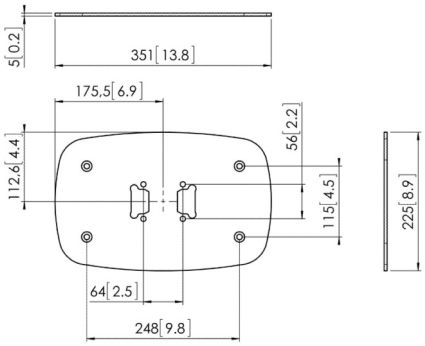	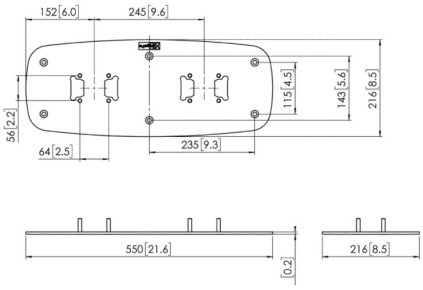

TROLLEY FRAMES

	PFT 8520 Trolley Frame	PFT 8530 Trolley Frame
Specifications		
Width (mm)	978	1086
Depth (mm)	826	849
Height (mm)	140	153
Guarantee		
TÜV certified	TÜV NORD	TÜV NORD
Guarantee	5 years	5 years
General		
Colour	Black | Silver	Black | Silver
Article number	7328520 (Black) 7328524 (Silver)	7328530 (Black) 7328534 (Silver)
EAN single box	8712285323904 (Black) 8712285323928 (Silver)	8712285323942 (Black) 8712285323966 (Silver)

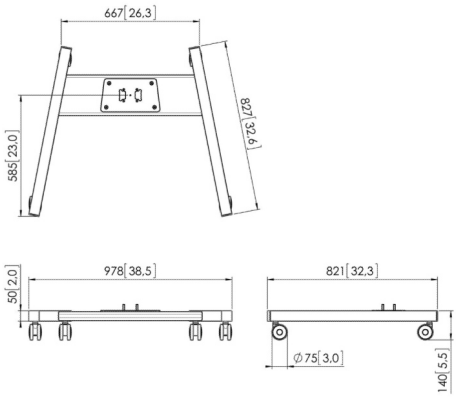

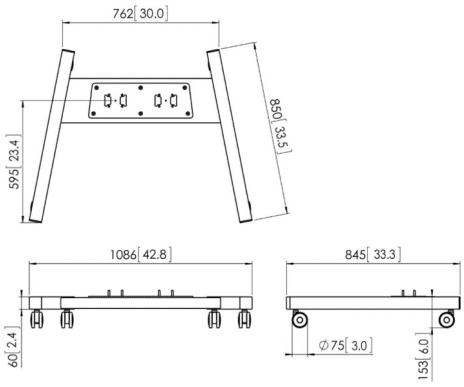

POLES

	PUC 2715 Pole	PUC 2718 Pole	PUC 2720 Pole
Specifications			
Length (mm)	1500	1800	2000
Guarantee			
TÜV certified	TÜV NORD	TÜV NORD	TÜV NORD
Guarantee	5 years	5 years	5 years
General			
Colour	Black | Silver	Black | Silver	Black | Silver
Article number	7227150 (Black) 7227154 (Silver)	7227180 (Black) 7227184 (Silver)	7227200 (Black) 7227204 (Silver)
EAN single box	8712285323621 (Black) 8712285323645 (Silver)	8712285323669 (Black) 8712285323683 (Silver)	8712285323706 (Black) 8712285323720 (Silver)

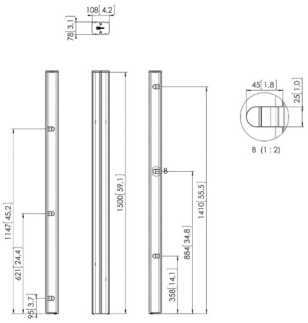

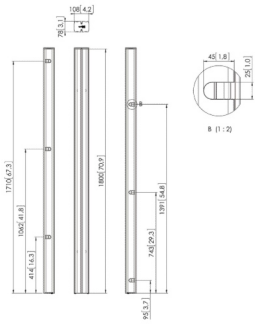

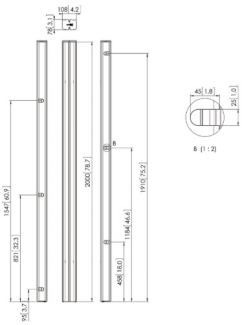

BACK COVERS

	PFA 9115 Back Cover landscape 42-49"	PFA 9116 Back Cover landscape 50-55"	PFA 9120 Back Cover portrait 42-49"
			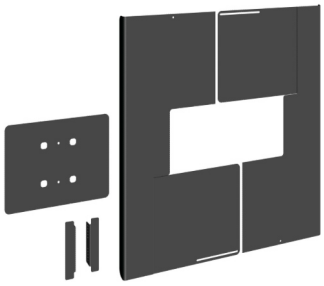
Specifications			
Min./ Max. screen size (inch)	42 / 49	50 / 55	42 / 49
Guarantee			
Guarantee	5 years	5 years	5 years
General			
Colour	Black	Black	Black
Article number	7291150	7291160	7291200
EAN single box	8712285324864	8712285324888	8712285327469
	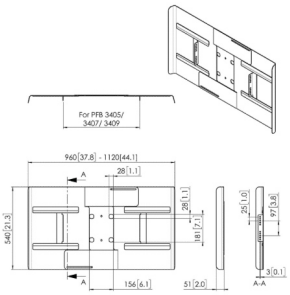	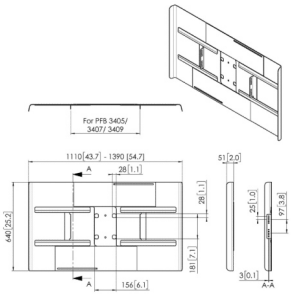	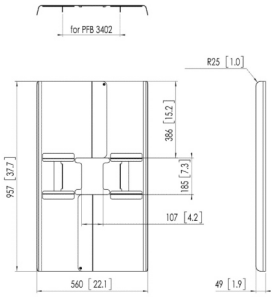

PFA 9121	PFA 9159	PFA 9160	PFA 9161
Back Cover portrait 50-55"	Back Cover landscape 65-70"	Back Cover portrait 65-70"	Back Cover landscape 75-80"
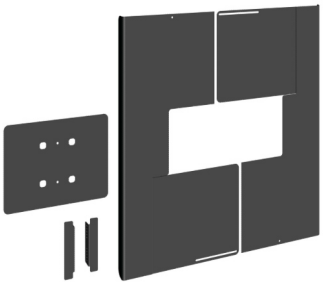		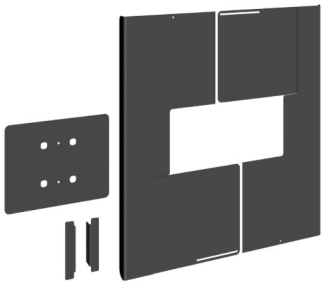	
50 / 55	65 / 70	65 / 70	75 / 80
5 years	5 years	5 years	5 years
Black	Black	Black	Black
7291210	7291590	7291600	7291610
8712285327483	8712285350627	8712285350641	8712285350665
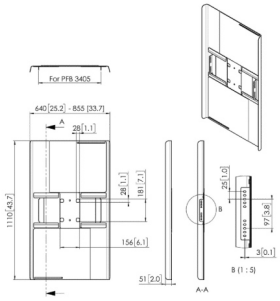	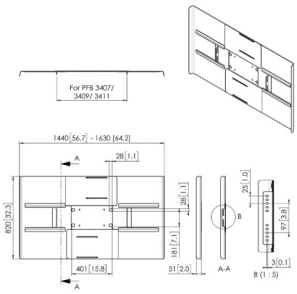	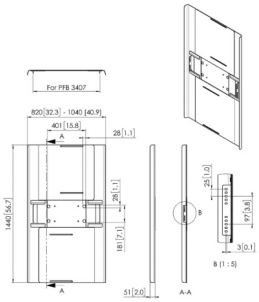	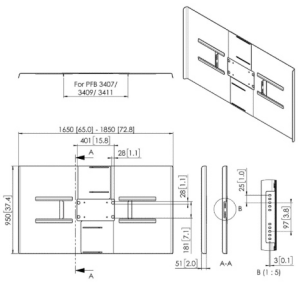

BACK COVERS

	PFA 9162 Back Cover portrait 75-80"	PFA 9163 Back Cover landscape 84-86"	PFA 9164 Back Cover portrait 84-86"
	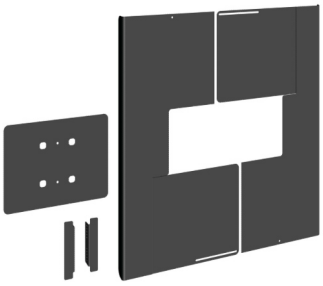		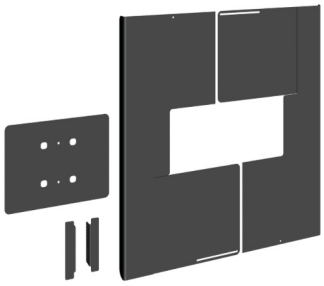
Specifications			
Min./ Max. screen size (inch)	75 / 80	84 / 86	84 / 86
Guarantee			
Guarantee	5 years	5 years	5 years
General			
Colour	Black	Black	Black
Article number	7291620	7291630	7291640
EAN single box	8712285350689	8712285350702	8712285350726
	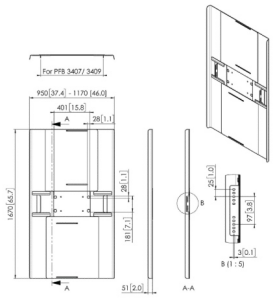	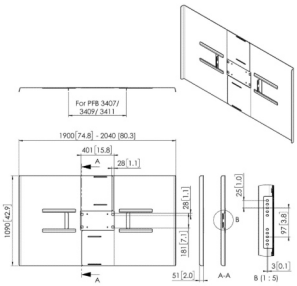	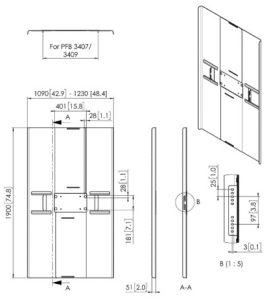

ACCESSORIES

	PVA 5050 Camera/Speaker Holder	PVA 5070 Camera/Speaker Holder
Specifications		
Max. weight load (Lbs)	22.05	22.05
Min./ Max. screen size (inch)	40 / 55	55 / 90
Guarantee		
Guarantee	5 years	5 years
General		
Colour	Black	Black
Article number	7015050	7015070
EAN single box	8712285329128	8712285329104

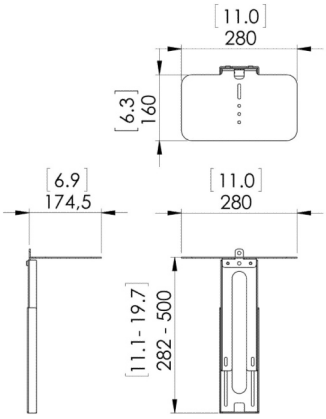

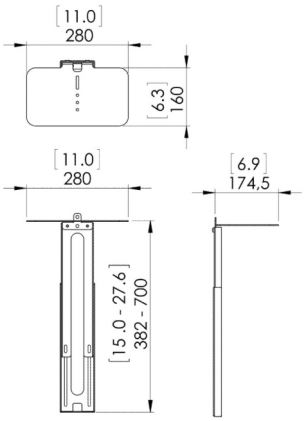

ACCESSORIES

	PFA 9112 Locking Cabinet	PFA 9113 Locking Cabinet
Specifications		
Max. weight load (Lbs)	22.05	44.09
Min./ Max. screen size (inch)	- / -	- / -
Guarantee		
Guarantee	5 years	5 years
General		
Colour	Silver	Silver
Article number	7291124	7291134
EAN single box	8712285324024	8712285324048
	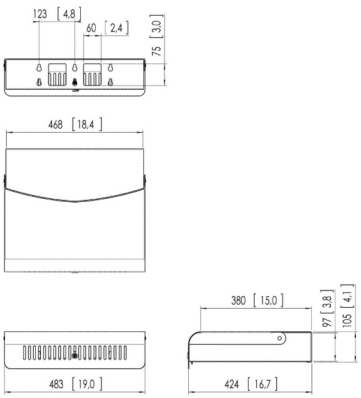	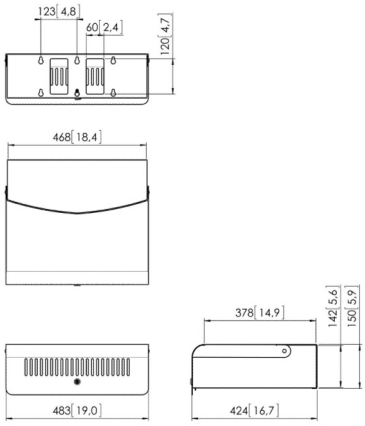

PUA 9507	PFA 9165	PFA 9166
Accessory Tray for PUC 24/25/27	Accessory Holder	Extension Set for PFA 9165
		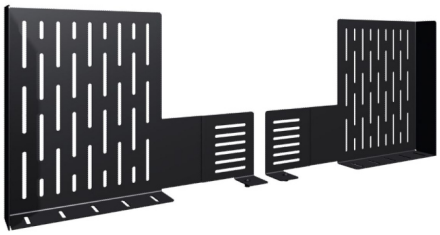
22.05	4.41	4.41
- / -	55 / -	55 / -
5 years	5 years	5 years
Black | Silver	Black	Black
7295095 (Black) 7295094 (Silver)	7291650	7291660
8712285325045 (Black) 8712285321047 (Silver)	8712285350863	8712285350887
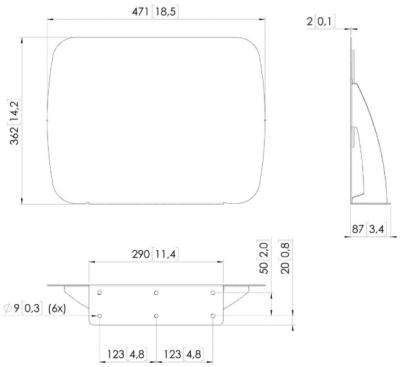	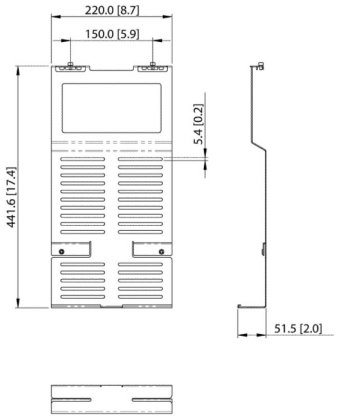	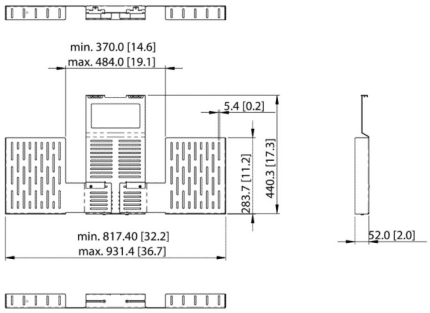

ACCESSORIES

	PFA 9114 Wheels heavy duty	PFA 9124 Grip for PUC 27/29
Specifications		
Max. weight load (Lbs)	352.74	
Min./ Max. screen size (inch)	- / -	- / -
Guarantee		
Guarantee	5 years	5 years
General		
Colour	Silver	Black
Article number	7291144	7291240
EAN single box	8712285324062	8712285330186

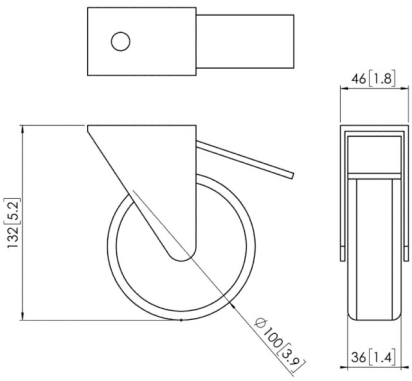

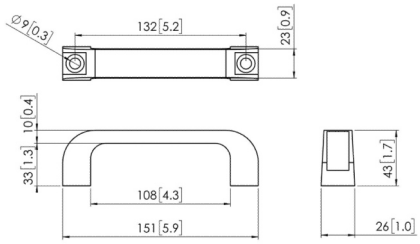

PFA 9127

Accessory Clamp for PUC 24/25/27

22.05

- / -

5 years

Black

7091270

8712285331985

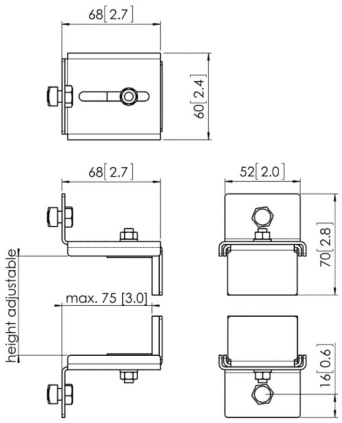

Universal Video Wall solutions

A new revolution

Vogel's always keeps pushing the boundaries of video wall mounting solutions. The complete range of universal video wall solutions of our existing Connect-it system, is expanded with applications for LCD video walls - in terms of size, position, mobility and flexibility. In addition, we can also offer solutions for LED walls, for a futureproof standard.

Height, width and quality

A minimal number of linkable components can be combined to create a mounting solution for all sizes of video walls. Vogel's existing Connect-it interface bars and display strips are the basis for any LCD video wall mounting solution. The unique connectable poles allow video walls to ascend to great heights.

Whether you need a ceiling, floor-to-wall, floor-to-ceiling, free-standing, back-to back, fixed or mobile solution, installation is clear and simple. One system for a host of applications, which is as durable as it is versatile, and with easy access for maintenance.

Safe and secure

Solidity, stability and safety are key. Solid support options and clear placement advice ensure correct and safe installation. And as always, this union of innovation and safety is sealed with TÜV-5 certification.

FLOOR STAND KITS

	FVW2255 Video Wall Floor Stand 2x2	FVW3347 Video Wall Floor Stand 3x3	FVW3355 Video Wall Floor Stand 3x3
Specifications			
Max. weight load (Lbs)	176.37	99.21	99.21
Height (mm)	2091	2790	2790
Min./ Max. screen size (inch)	46 / 55	46 / 47	55 / 55
Guarantee			
TÜV certified	TÜV NORD	TÜV NORD	TÜV NORD
Guarantee	5 years	5 years	5 years
General			
Colour	Black	Black	Black
Article number	7922550	7933470	7933550
	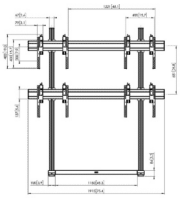	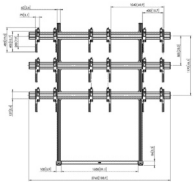	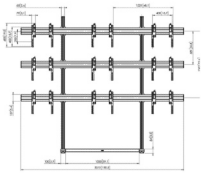

TROLLEY KITS

	TVW2255 Video Wall Trolley 2x2	TVW3347 Video Wall Trolley 3x3	TVW3355 Video Wall Trolley 3x3
Specifications			
Max. weight load (Lbs)	176.37	99.21	99.21
Height (mm)	2178	2878	2878
Min./ Max. screen size (inch)	46 / 55	46 / 47	55 / 55
Guarantee			
TÜV certified	TÜV NORD	TÜV NORD	TÜV NORD
Guarantee	5 years	5 years	5 years
General			
Colour	Black	Black	Black
Article number	7922560	7933480	7933560
	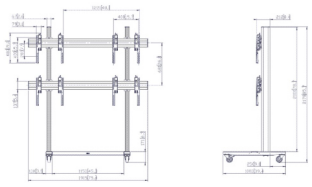	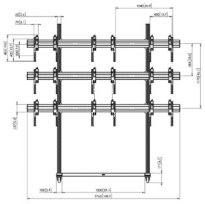	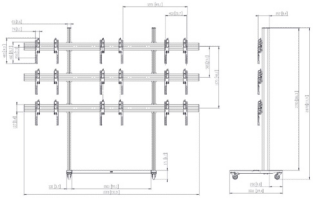

FLOOR MOUNTED KITS

	FMVW2255 Video Wall Floor Stand, fixed to floor 2x2	FMVW3347 Video Wall Floor Stand, fixed to floor 3x3	FMVW3355 Video Wall Floor Stand, fixed to floor 3x3
Specifications			
Max. weight load (Lbs)	176.37	99.21	99.21
Height (mm)	2017	2725	2725
Min./ Max. screen size (inch)	46 / 55	46 / 47	55 / 55
Guarantee			
TÜV certified	TÜV NORD	TÜV NORD	TÜV NORD
Guarantee	5 years	5 years	5 years
General			
Colour	Black	Black	Black
Article number	7922570	7933490	7933570

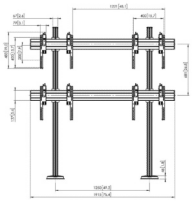

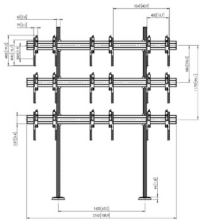

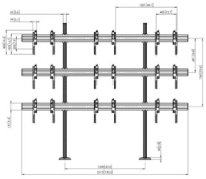

FLOOR TO CEILING KITS

	FCVW2255 Video Wall floor-ceiling 2x2	FCVW3347 Video Wall floor-ceiling 3x3	FCVW3355 Video Wall floor-ceiling 3x3
		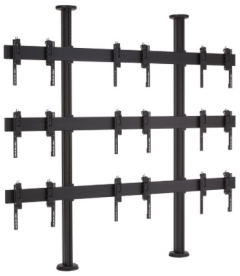	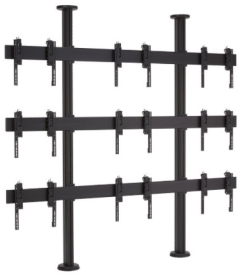
Specifications			
Max. weight load (Lbs)	176.37	116.84	116.84
Height (mm)	3322	3322	3322
Min./ Max. screen size (inch)	46 / 55	46 / 47	55 / 55
Guarantee			
TÜV certified	TÜV NORD	TÜV NORD	TÜV NORD
Guarantee	5 years	5 years	5 years
General			
Colour	Black	Black	Black
Article number	7922580	7933500	7933580

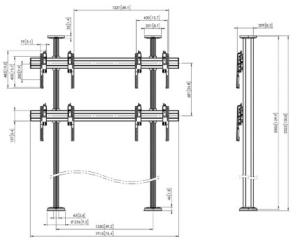

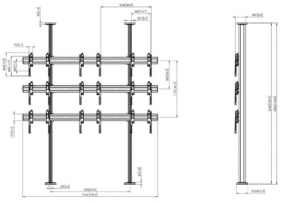

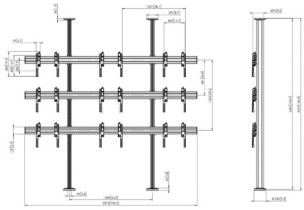

CEILING KITS

	CVW2255 Video Wall Ceiling solution 2x2	CVW3347 Video Wall Ceiling solution 3x3	CVW3355 Video Wall Ceiling solution 3x3
	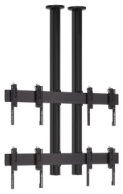	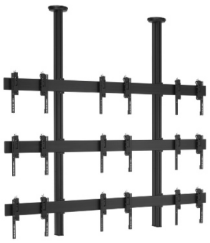	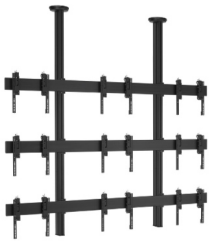
Specifications			
Max. weight load (Lbs)	176.37	99.21	99.21
Height (mm)	2025	2725	2725
Min./ Max. screen size (inch)	55 / 55	46 / 47	55 / 55
Guarantee			
TÜV certified	TÜV NORD	TÜV NORD	TÜV NORD
Guarantee	5 years	5 years	5 years
General			
Colour	Black	Black	Black
Article number	7922590	7933510	7933590

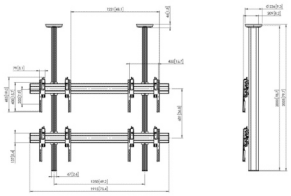

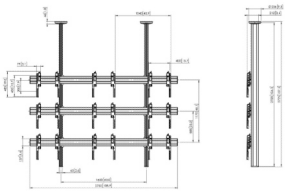

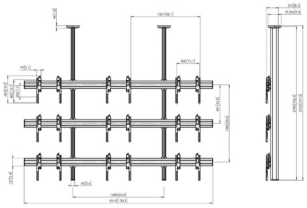

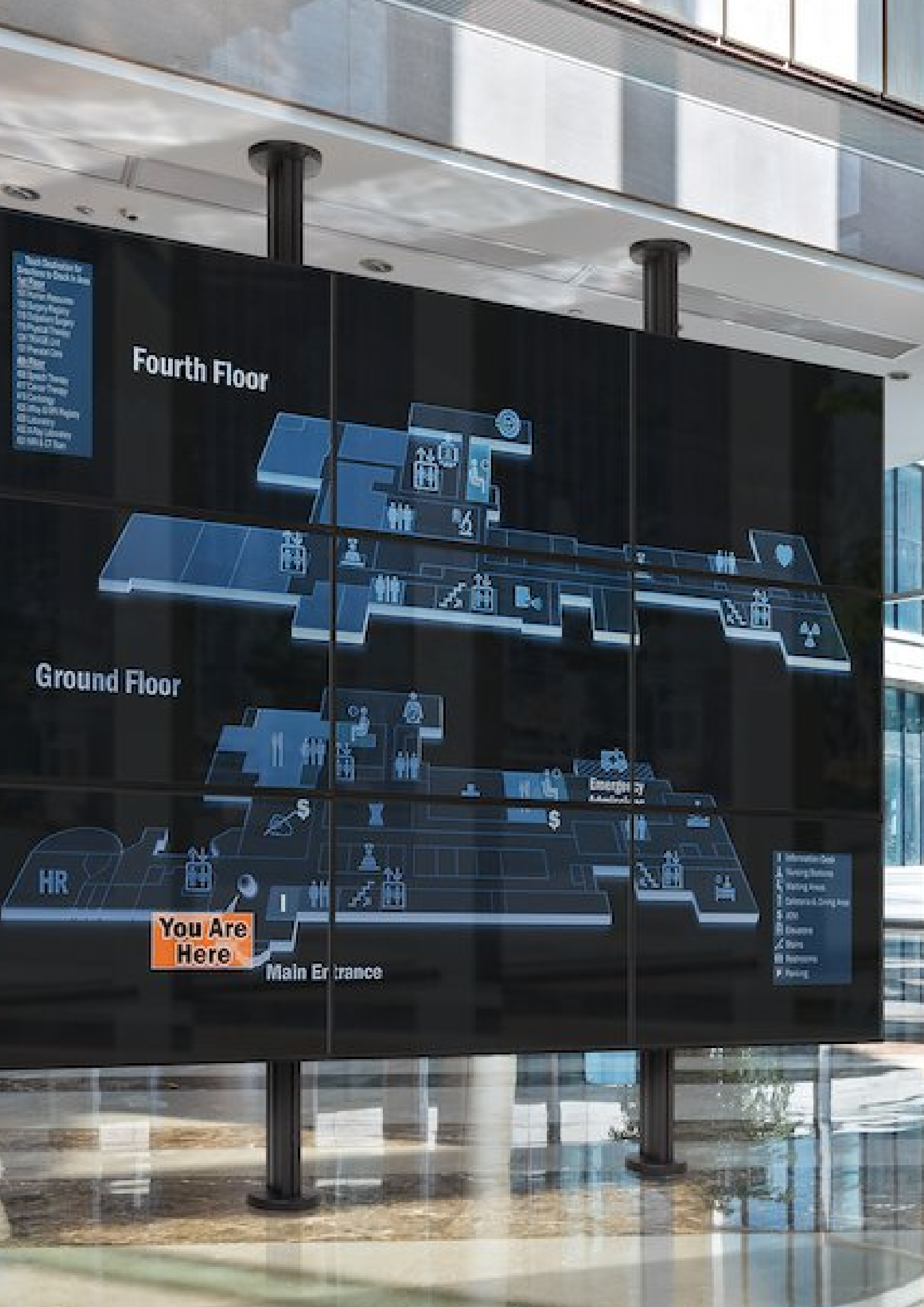
Fourth Floor
Ground Floor
HR
You Are Here
Main Entrance

FLOOR BASES

	PFF 7920 Video Wall Floor Stand Base	PFT 8920 Video Wall Trolley base	PFA 9129 Video Wall Cross Bar	PFA 9130 Video Wall Cross Bar
Specifications				
Max. weight load (Lbs)	446.44	446.44		
Length (mm)	1000	1000	1150	1500
Width (mm)	100	100	172	172
Height (mm)	84	171	60	60
Guarantee				
TÜV certified	TÜV NORD	TÜV NORD	TÜV NORD	TÜV NORD
Guarantee	5 years	5 years	5 years	5 years
General				
Colour	Black	Black	Black	Black
Article number	7279200	7289200	7291290	7291300
EAN single box	8712285336669	8712285336645	8712285336683	8712285336706
	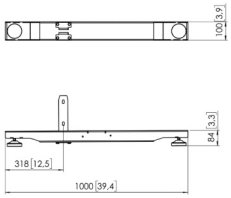	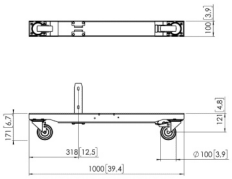	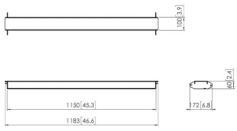	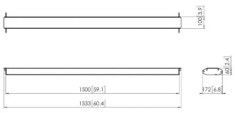

FLOOR / CEILING PLATES

	PFF 7965 Floor/Ceiling Mounting Plate adjustable	PFA 9132 Floor/Ceiling Support
Specifications		
Max. weight load (Lbs)	744.06	
Width (mm)	236	184
Height (mm)	234	120
Exceptions | Remarks		Combine with PFF 7965
Guarantee		
TÜV certified	TÜV NORD	TÜV NORD
Guarantee	5 years	5 years
General		
Colour	Black	Black
Article number	7279650	7291320
EAN single box	8712285343186	8712285336829

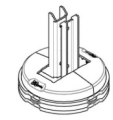

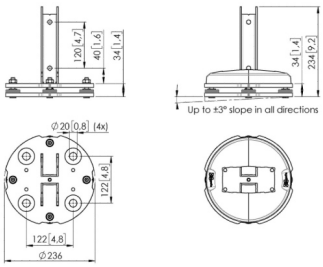

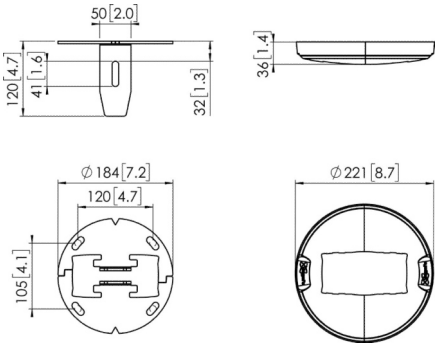

POLES

	PUC 2920 Pole	PUC 2927 Pole	PUC 2933 Pole
Specifications			
Length (mm)	2000	2700	3300
Guarantee			
TÜV certified	TÜV NORD	TÜV NORD	TÜV NORD
Guarantee	5 years	5 years	5 years
General			
Colour	Black	Black	Black
Article number	7229200	7229270	7229330
EAN single box	8712285335761	8712285336720	8712285336744
	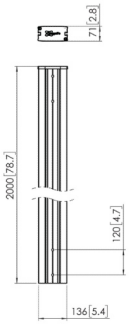	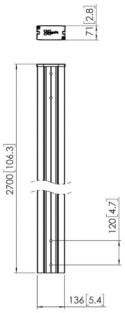	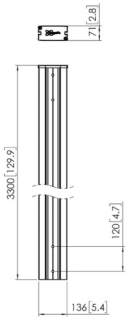

DISPLAY INTERFACE BARS

	PFB 3402 Display Interface Bar	PFB 3405 Display Interface Bar	PFB 3407 Display Interface Bar	PFB 3409 Display Interface Bar
Specifications				
Width (mm)	290	515	715	915
Min. horizontal hole pattern (mm)	100	100	100	100
Max. horizontal hole pattern (mm)	225	450	650	850
Guarantee				
TÜV certified	TÜV NORD	TÜV NORD	TÜV NORD	TÜV NORD
Guarantee	5 years	5 years	5 years	5 years
General				
Colour	Black | Silver	Black | Silver	Black | Silver	Black | Silver
Article number	7234020 (Black) 7234024 (Silver)	7234050 (Black) 7234054 (Silver)	7234070 (Black) 7234074 (Silver)	7234090 (Black) 7234094 (Silver)
EAN single box	8712285329401 (Black) 8712285323027 (Silver)	8712285329425 (Black) 8712285318764 (Silver)	8712285329449 (Black) 8712285318788 (Silver)	8712285329463 (Black) 8712285318801 (Silver)

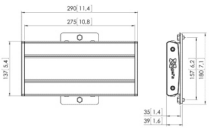
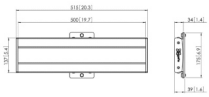

PFB 3411	PFB 3419	PFB 3427	PFB 3433
Display Interface Bar	Display Interface Bar	Display Interface Bar	Display Interface Bar
1175	1915	2750	3300
100	100	100	100
1110	1850	2700	3250
5 years	5 years	5 years	5 years
Black | Silver	Black | Silver	Black | Silver	Black | Silver
7234110 (Black) 7234114 (Silver)	7234190 (Black) 7234194 (Silver)	7234270 (Black) 7234274 (Silver)	7234330 (Black) 7234334 (Silver)
8712285329487 (Black) 8712285318825 (Silver)	8712285328749 (Black) 8712285330209 (Silver)	8712285328763 (Black) 8712285330223 (Silver)	8712285328787 (Black) 8712285330247 (Silver)
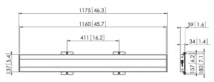	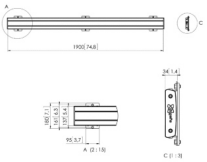	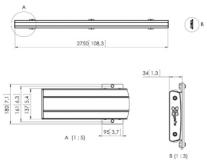	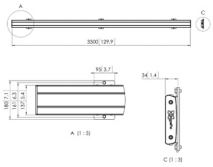

DISPLAY INTERFACE STRIPS

	PFS 3504 Display Interface Strips 3D adjustable	PFS 3508 Display Interface Strips 3D adjustable
Specifications		
Max. weight load (Lbs)	176.37	176.37
Min. vertical hole pattern (mm)	100	200
Max. vertical hole pattern (mm)	400	800
Max. height of interface (mm)	482	857
Tilt	Tilt -3°/+7°	Tilt -3°/+7°
Guarantee		
TÜV certified	TÜV NORD	TÜV NORD
Guarantee	5 years	5 years
General		
Colour	Black	Black
Article number	7235040	7235080
EAN single box	8712285328800	8712285328824

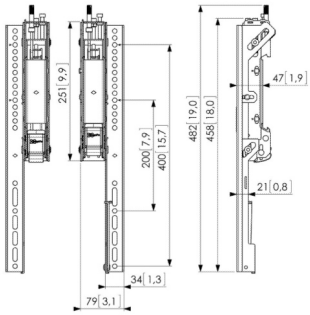

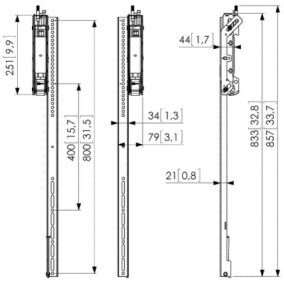

ACCESSORIES

	PFA 9141 Wall support sliding bracket basic kit long	PFA 9142 Wall support extension kit 2 arms
		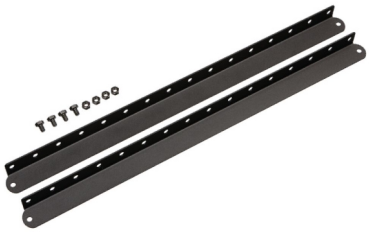
Specifications		
Length (mm)	620	620
Adjustable depth	•	
Guarantee		
TÜV certified	TÜV NORD	TÜV NORD
Guarantee	5 years	5 years
General		
Colour	Black	Black
Article number	7291410	7291420
EAN single box	8712285342967	8712285343223

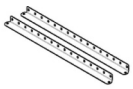

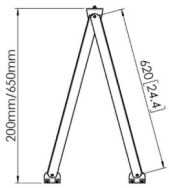

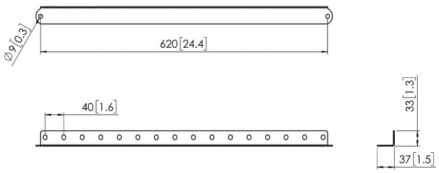

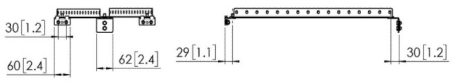

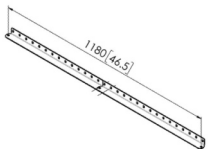

ACCESSORIES

	PFA 9143 Wall support extension kit 3 arms	PFA 9144 Wall support sliding bracket basic kit short	PFA 9156 Pole Coupler for PUC 29
	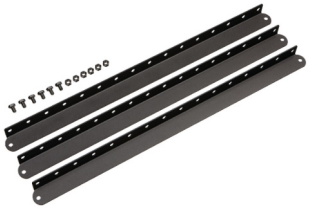		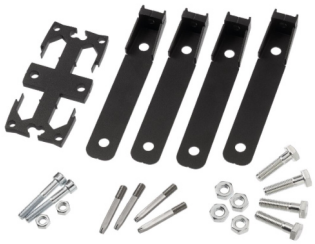
Specifications			
Length (mm)	620	260	
Adjustable depth			
Guarantee			
TÜV certified	TÜV NORD	TÜV NORD	
Guarantee	5 years	5 years	5 years
General			
Colour	Black	Black	Black
Article number	7291430	7291440	7291564
EAN single box	8712285343247	8712285343261	8712285346842
	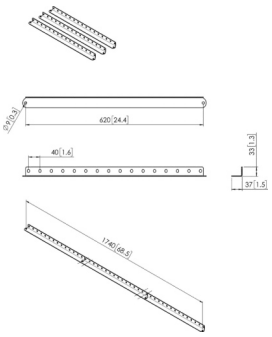	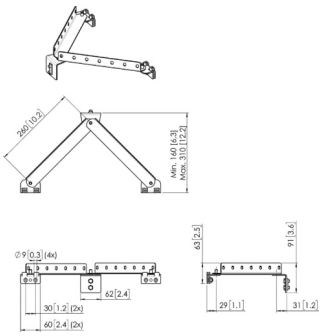	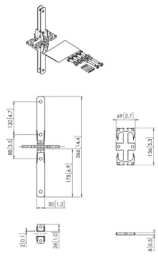

PFA 9104

Bar Coupler for PFB 34xx

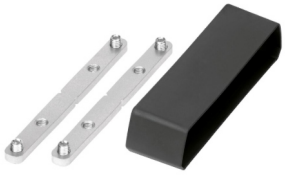

5 years

Black

7291040

8712285320743

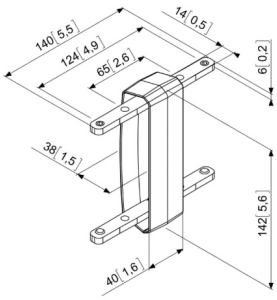

PFA 9128

Cable Clip for PFB 34xx

5 years

Black

7291280

8712285338106

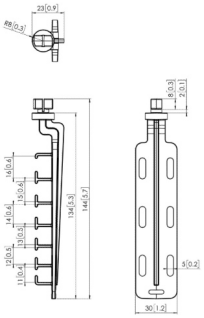

LED Wall solutions

Multiple mounting options

The use of LED displays is becoming more and more popular and they can be connected in an endless number of ways. The size of a LED wall is not limited to standard sizes. That's why Vogel's has developed a LED interface that is suitable for the Vogel's Connect-it system. This means that there are many different conceivable mounting options.

Dedicated LED Interfaces and Bolts

Vogel's has dedicated PLA 84 LED Interface accessories and PLA 88 LED Mounting Bolts for specific LED cabinets available. Universal interface kits are also available, so there is a solution for every LED wall.

A solution for many brands

To make it easy for the user, specific interface kits are available for brands such as Samsung, LG, Optoma and Philips (including Philips 7000 Series dvLED wall).

These interface kits can be mounted directly on the wall, on Connect-it floor stands or trolleys and some can even be mounted on Vogel's Motorized Trolley PFTE 7120.

Why choose a Vogel's LED Wall Mount

- Both exclusively developed products for renowned LED wall brands and universal solutions
- Precision designed and manufactured with display-specific interfaces and mounting patterns
- Vogel's quality, designed to TÜV standards
- Can be combined with Vogel's unique Connect-it system
- For wall, ceiling or floor mounting
- Easy, fast and seamless installation
- Integrated or guided cabling
- Hardware easy and neat to conceal
- Lightweight aluminium frame

For all up-to-date solutions visit our website.

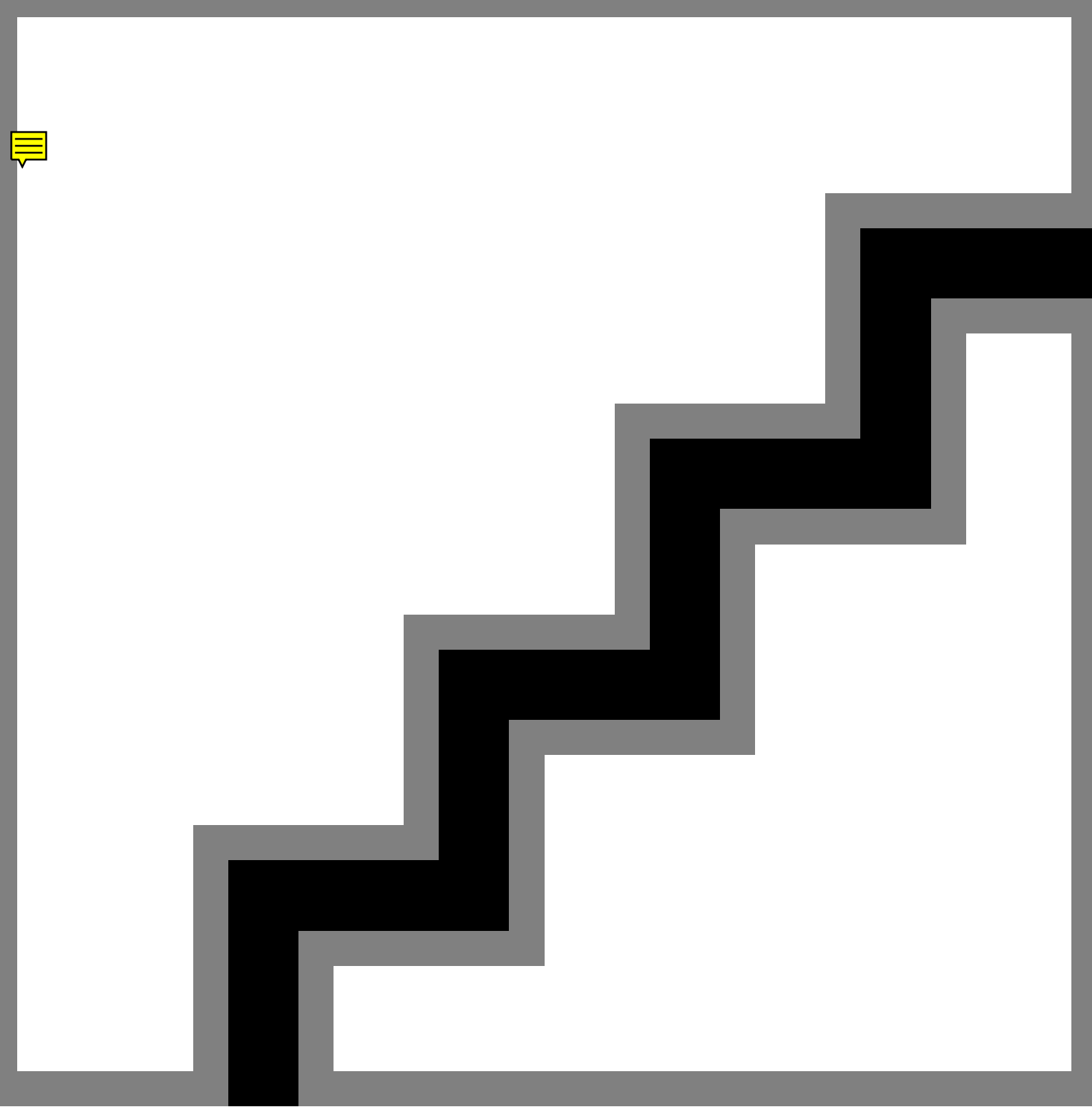

LED WALL MOUNTS

	PLM 8030 Profile 3000 mm	PLS 8001 Vertical Profile Mounting Strips	PLA 8401 dvLED Interface	PLA 8800 Mounting bolts M6, M8, M10
Specifications				
Length (mm)	3000			
Guarantee				
TÜV certified	TÜV NORD	TÜV NORD	TÜV NORD	
Guarantee	5 years	5 years	5 years	5 years
General				
Colour	Black	Black	Silver	Silver
Article number	7380300	7380010	7184014	7188004
EAN single box	8712285339363	8712285339387	8712285352669	8712285354960

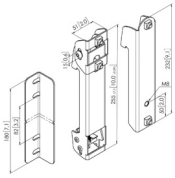

LED WALL INTERFACES

	INT8001 LED Wall Interface for Philips FHD 110BDL9112	INT8101 LED Wall Interface for Samsung IFR/IER 1.5 mm, 3x3
Specifications		
Orientation	Landscape	Landscape
LED brand	Philips	Samsung
Guarantee		
TÜV certified	TÜV NORD	TÜV NORD
Guarantee	5 years	5 years
General		
Colour	Black	Black
Article number	7951150	7951220
EAN single box	8712285352102	8712285352225

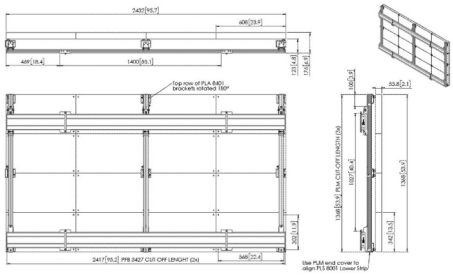

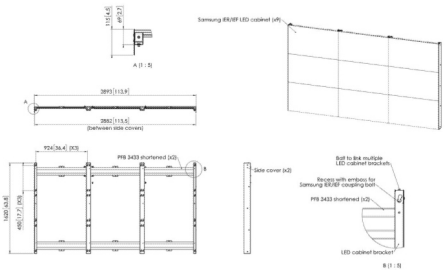

LED WALL INTERFACES

	INT8201 LED Wall Interface for LG 130 All-in-one (LAAF series)	INT8301 LED Wall Interface for Optoma Quad 130"
Specifications		
Orientation	Landscape	Landscape
LED brand	LG	Optoma
Guarantee		
TÜV certified	TÜV NORD	TÜV NORD
Guarantee	5 years	5 years
General		
Colour	Black	Black
Article number	7951260	7283010
EAN single box	8712285352300	8712285351440
	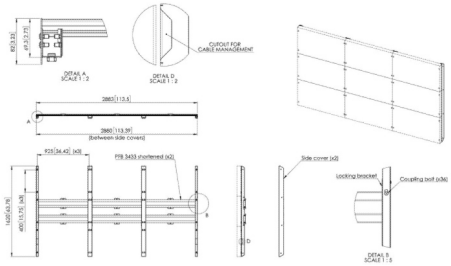	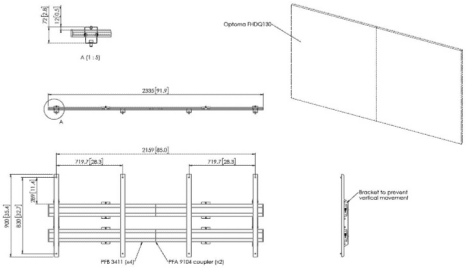

Barco UniSee® and TruePix solutions

A solution for any Barco UniSee® and TruePix configuration

Vogel's is preferred supplier for mounting Barco UniSee (LCD) and Barco TruePix (LED) video walls in curved setups. In close cooperation with Barco, Vogel's developed dedicated mounting solutions for both Barco UniSee and TruePix, that present the video walls in its best light in any configuration.

For Barco TruePix flat wall mounting, there are also special wall mounting plates available. The dept of our wall solution (including cabinet) is only 4 inch which makes our solution ADA compliant.

Combine the dedicted UniSee adapters or TruePix interface kits with the Vogel's Connect-it system and you will be able to create any type of Barco video wall configuration: ceiling, floor, floor-wall, floor-ceiling, back-to-back, freestanding, fixed, or mobile. Curved solutions can be mounted directly on the floor.

High quality video wall mounting requires extreme precision, as all displays have to fit together seamlessly. That's why all Vogel's video wall solutions are intelligently designed.

Key features

- Modular and universal system
- Lightweight aluminium profiles
- Integrated cable management
- Dedicated UniSee/TruePix mounting adapters
- Dedicated TruePix interface kits
- Quick, easy and seamless installation
- TÜV-5 certified
- ADA compliant

PFW 1000 Series Wall Mounts

Designed for various markets

Whether displaying in the hospitality, the office market or other businesses, it's all about providing your guests and customers with the best possible services. The PFW 1000 Series is, thanks to its clean aesthetics and slim profile, perfect to make your content pop.

The included discrete padlock ensures that your display is secured.

Key features

- Stylish high-end design
- VESA 50x50, 75x75, 100x100 mm
- Theft-delaying padlock
- Continuous smooth tilt
- TÜV certified

1000 SERIES

	PFW 1030 Wall Mount turn & tilt	PFW 1040 Wall Mount turn & tilt
Specifications		
Max. weight load (Lbs)	35.27	35.27
Min./ Max. screen size (inch)	10 / 28	10 / 28
Number of pivot points	2	3
Turn	Up to 120°	Up to 180°
Tilt	Tilt -10°/+10°	Tilt -10°/+10°
Lock options	Lock included / integrated	Lock included / integrated
Min. distance to the wall (inch)	3.03	3.03
Hole pattern (VESA)	50 mm x 50 mm 75 mm x 75 mm 100 mm x 100 mm	50 mm x 50 mm 75 mm x 75 mm 100 mm x 100 mm
Guarantee		
TÜV certified	TÜV NORD	TÜV NORD
Guarantee	5 years	5 years
General		
Colour	Black	Black
Article number	7310300	7310400
EAN single box	8712285342424	8712285342448

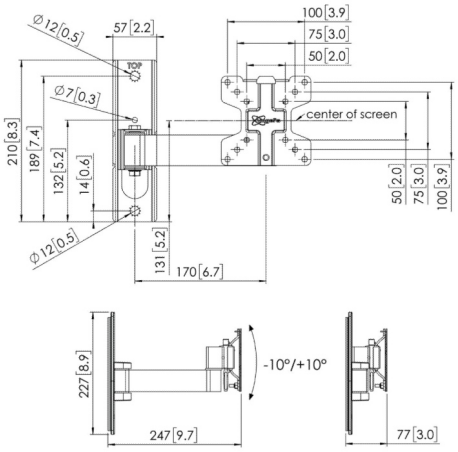

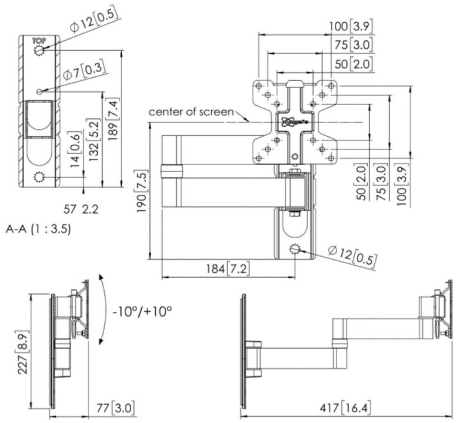

PFW 2000 Series Wall Mounts

Designed with the hospitality market in mind

Hospitality is about providing your guests with the best possible services. One of those services is in-room entertainment, of which guests expect nothing but the best. The PFW 2000 Series is, thanks to its clean aesthetics and slim profile, perfect to make your content shine. The included discrete padlock ensures that your HotelTV is secure. This, together with TÜV certification, guarantees a slim and safe solution.

Key features

- Stylish high-end design
- VESA 75x75, 100x100, 200x200 mm
- Post-installation levelling
- Theft-delaying padlock
- Continuous smooth tilt
- TÜV certified

2000 SERIES

	PFW 2020 Wall Mount turn & tilt	PFW 2030 Wall Mount turn & tilt	PFW 2040 Wall Mount turn & tilt
Specifications			
Max. weight load (Lbs)	35.27	35.27	35.27
Min./ Max. screen size (inch)	19 / 43	19 / 43	19 / 43
Number of pivot points	1	2	3
Turn	Up to 60°	Up to 120°	Up to 180°
Tilt	Tilt -10°/+10°	Tilt -10°/+10°	Tilt -10°/+10°
Lockable	•	•	•
Min. distance to the wall (inch)	3.03	3.03	3.03
Hole pattern (VESA)	75 mm x 75 mm 100 mm x 100 mm 200 mm x 100 mm 200 mm x 200 mm	75 mm x 75 mm 100 mm x 100 mm 200 mm x 100 mm 200 mm x 200 mm	75 mm x 75 mm 100 mm x 100 mm 200 mm x 100 mm 200 mm x 200 mm
Guarantee			
TÜV certified	TÜV NORD	TÜV NORD	TÜV NORD
Guarantee	5 years	5 years	5 years
General			
Colour	Black	Black	Black
Article number	7320200	7320300	7320400
EAN single box	8712285335105	8712285335129	8712285335143

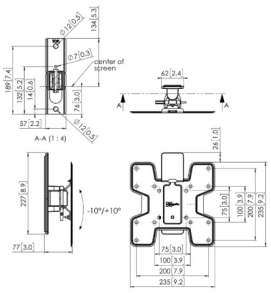

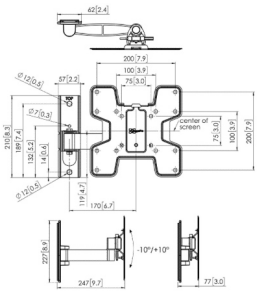

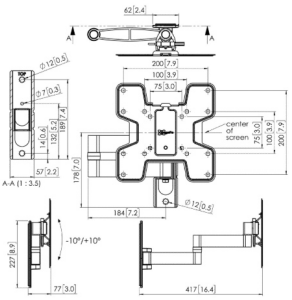

PFW 3000 Series Wall Mounts

Designed for the high demanding hospitality market

In-room entertainment is a big part of a guest's experience. Vogel's understands that and designed the PFW 3000 Series to give everybody an outstanding AV experience. We make sure that the content is viewable from every angle. The mount's discrete padlock ensures that a HotelTV or any other display is secure in most occasions. With a maximum fitment of 400x400 mm the mount can hold a large range of displays. The TÜV certified PFW 3000 Series provides an exceptional safe and elegant solution.

Key features

- Stylish high-end design
- VESA 100x100, 200x200, 300x300, 400x400 mm
- Post-installation levelling
- Theft-delaying padlock
- Continuous smooth tilt
- TÜV certified
- Cable management

3000 SERIES

	PFW 3030 Wall Mount turn & tilt	PFW 3040 Wall Mount turn & tilt
Specifications		
Max. weight load (Lbs)	77.16	77.16
Min./ Max. screen size (inch)	39 / 55	39 / 55
Number of pivot points	2	3
Turn	Up to 120°	Up to 180°
Tilt	Tilt -15°/+10°	Tilt -15°/+10°
Lockable	•	•
Min. distance to the wall (inch)	4.21	4.57
Hole pattern (VESA)	100 mm x 100 mm 100 mm x 200 mm 200 mm x 100 mm 200 mm x 200 mm 300 mm x 200 mm 300 mm x 300 mm 400 mm x 200 mm 400 mm x 300 mm 400 mm x 400 mm	100 mm x 100 mm 100 mm x 200 mm 200 mm x 100 mm 200 mm x 200 mm 300 mm x 200 mm 300 mm x 300 mm 400 mm x 200 mm 400 mm x 300 mm 400 mm x 400 mm
Guarantee		
TÜV certified	TÜV NORD	TÜV NORD
Guarantee	5 years	5 years
General		
Colour	Black	Black
Article number	7330300	7330400
EAN single box	8712285335167	8712285335181

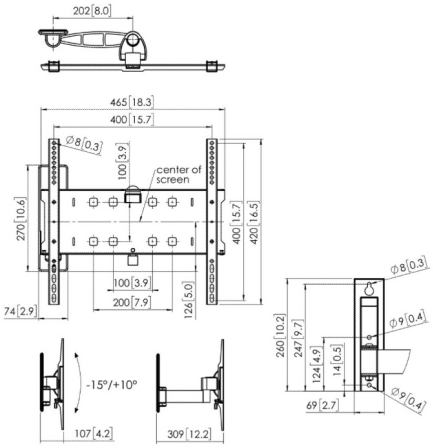

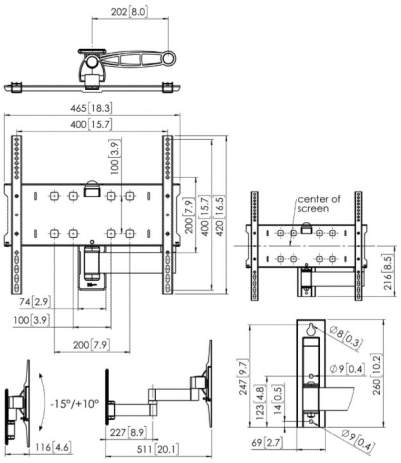

PFW 4000 Series Wall Mounts

Maximum security in public places

A straightforward wall mount with the renowned Vogel's quality. A simple and affordable solution for installing displays in public spaces where supervision is limited. Displays can be locked in two ways for an optimal theft-delaying solution.

Attractive design and price

The PFW 4000 Series offers a reliable Vogel's wall mount for displays from 10" to 80". The wall mounts ensure a completely flat wall installation and are available in fixed and tilting versions. The tilt function can be adjusted in steps, making higher mounted displays easy to see and read.

Always level

Specially shaped drill holes allow the position of the wall plate to be adjusted once it has been mounted to the wall. This ensures that the mount is always level. Everything you need for installation is supplied in the box, including high quality mounting materials. This ensures that you have everything to hand.

Key features

- Tilt in steps 0°, 7°, 12° and 15°
- VESA max. 600x400 mm
- Fixed tilt position
- Autolock® locking system
- Locking bar and padlock
- TÜV certified

4000 SERIES

	PFW 4200 Wall Mount fixed	PFW 4500 Wall Mount fixed	PFW 4700 Wall Mount fixed
		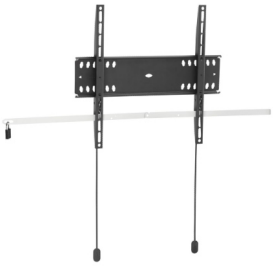	
Specifications			
Max. weight load (Lbs)	66.14	110.23	165.35
Min./ Max. screen size (inch)	10 / 43	42 / 55	55 / 80
Tilt			
Lockable	•	•	•
Min. distance to the wall (inch)	1.06	1.06	1.06
Hole pattern (VESA)	50 mm x 50 mm 75 mm x 75 mm 100 mm x 100 mm 100 mm x 200 mm 200 mm x 100 mm 200 mm x 200 mm	100 mm x 100 mm 100 mm x 200 mm 200 mm x 100 mm 200 mm x 200 mm 300 mm x 200 mm 300 mm x 300 mm 400 mm x 200 mm 400 mm x 300 mm 400 mm x 400 mm	100 mm x 100 mm 100 mm x 200 mm 200 mm x 100 mm 200 mm x 200 mm 300 mm x 200 mm 300 mm x 300 mm 400 mm x 200 mm 400 mm x 300 mm 400 mm x 400 mm 500 mm x 200 mm 500 mm x 300 mm 500 mm x 400 mm 600 mm x 200 mm 600 mm x 300 mm 600 mm x 400 mm
Guarantee			
TÜV certified	TÜV NORD	TÜV NORD	TÜV NORD
Guarantee	5 years	5 years	5 years
General			
Colour	Black	Black	Black
Article number	7042000	7045000	7047000
EAN single box	8712285330988	8712285338601	8712285338649
	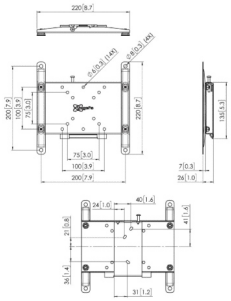	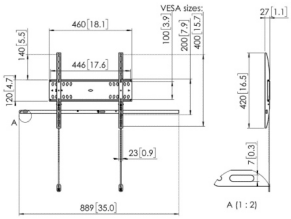	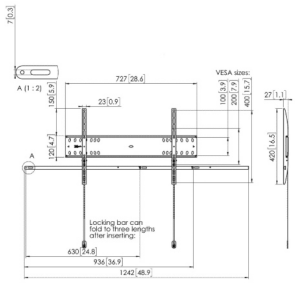

4000 SERIES

	PFW 4210 Wall Mount tilt	PFW 4510 Wall Mount tilt	PFW 4710 Wall Mount tilt
Specifications			
Max. weight load (Lbs)	66.14	110.23	165.35
Min./ Max. screen size (inch)	10 / 43	42 / 55	55 / 65
Tilt	Tilt up to 15°	Tilt up to 15°	Tilt up to 15°
Lockable	•	•	•
Min. distance to the wall (inch)	2.09	2.05	2.05
Hole pattern (VESA)	50 mm x 50 mm 75 mm x 75 mm 100 mm x 100 mm 100 mm x 200 mm 200 mm x 100 mm 200 mm x 200 mm	100 mm x 100 mm 100 mm x 200 mm 200 mm x 100 mm 200 mm x 200 mm 300 mm x 200 mm 300 mm x 300 mm 400 mm x 200 mm 400 mm x 300 mm 400 mm x 400 mm	100 mm x 100 mm 100 mm x 200 mm 200 mm x 100 mm 200 mm x 200 mm 300 mm x 200 mm 300 mm x 300 mm 400 mm x 200 mm 400 mm x 300 mm 400 mm x 400 mm 500 mm x 200 mm 500 mm x 300 mm 500 mm x 400 mm 600 mm x 200 mm 600 mm x 300 mm 600 mm x 400 mm
Guarantee			
TÜV certified	TÜV NORD	TÜV NORD	TÜV NORD
Guarantee	5 years	5 years	5 years
General			
Colour	Black	Black	Black
Article number	7042100	7045100	7047100
EAN single box	8712285331008	8712285338625	8712285338663

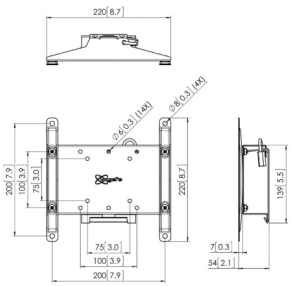

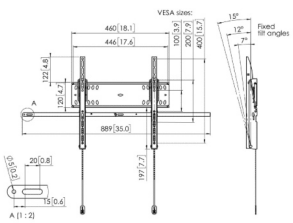

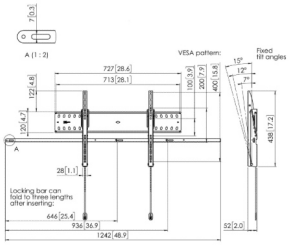

PFW 6000 Series Wall Mounts

Heavy-duty wall mounts

Meet our 'next level' professional wall mounts. This series combines all we know about quality and ease-of- installation. For instance, post-installation levelling, self centering screws and easy access for maintenance. All of this for displays up to 120" and max. 230 kg.

The design of the PFW 6000 Series is both robust and elegant. There are several models available as fixed wall mount or tilting up to 15°. In addition, all types have an easy accessible integrated lock. As always with Vogel's, these wall mounts come with a 5-year material and manufacturing error warranty.

Key features

- Easy levelling and installation
- Horizontal levelling (post-installation)
- Self-centering display bolts
- Easy accessible integrated lock
- Locked service position
- Tilt function up to 15°
- TÜV certified

6000 SERIES

	PFW 6400 Wall Mount fixed	PFW 6410 Wall Mount tilt	PFW 6800 Wall Mount fixed
Specifications			
Max. weight load (Lbs)	220.46	165.35	220.46
Min./ Max. screen size (inch)	46 / 65	46 / 65	55 / 80
Tilt		Tilt up to 15°	
Levelling function	Post-installation horizontal levelling	Post-installation horizontal levelling	Post-installation horizontal levelling
Lock options	Lock included / integrated	Lock included / integrated	Lock included / integrated
Min. distance to the wall (inch)	1.38	2.05	1.38
Exceptions | Remarks			
Hole pattern (VESA)	75 mm x 75 mm 200 mm x 100 mm 200 mm x 200 mm 300 mm x 200 mm 300 mm x 300 mm 400 mm x 200 mm 400 mm x 300 mm 400 mm x 400 mm	75 mm x 75 mm 100 mm x 100 mm 100 mm x 200 mm 200 mm x 100 mm 200 mm x 200 mm 300 mm x 200 mm 300 mm x 300 mm 400 mm x 200 mm 400 mm x 300 mm 400 mm x 400 mm	75 mm x 75 mm 100 mm x 100 mm 100 mm x 200 mm 200 mm x 100 mm 200 mm x 200 mm 300 mm x 200 mm 300 mm x 300 mm 400 mm x 200 mm 400 mm x 300 mm 400 mm x 400 mm 500 mm x 200 mm 500 mm x 300 mm 500 mm x 400 mm 600 mm x 200 mm 600 mm x 300 mm 600 mm x 400 mm 700 mm x 400 mm 800 mm x 400 mm
Guarantee			
TÜV certified	TÜV NORD	TÜV NORD	TÜV NORD
Guarantee	5 years	5 years	5 years
General			
Colour	Black	Black	Black
Article number	7364000	7364100	7368000
EAN single box	8712285334122	8712285334146	8712285334160

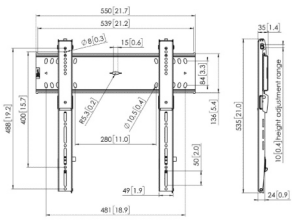

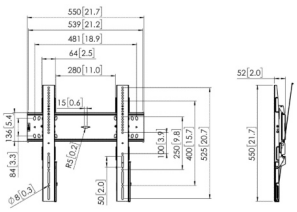

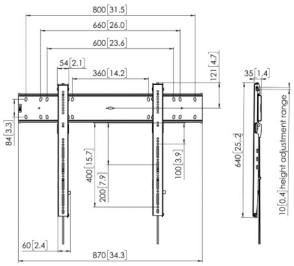

PFW 6810	PFW 6815	PFW 6900	PFW 6910
Wall Mount tilt	Wall Mount portrait fixed	Wall Mount fixed	Wall Mount tilt
165.35	220.46	352.74	507.06
55 / 80	46 / 100	80 / 120	80 / 120
Tilt up to 15°			Tilt up to 15°
Post-installation horizontal levelling	Post-installation horizontal levelling	Post-installation horizontal levelling	Post-installation horizontal levelling
Lock included / integrated	Lock included / integrated	Lock option/accessory	Lock included / integrated
2.05		1.65	2.44
			Max. load flat: 230 kg /tilt: 185 kg
75 mm x 75 mm 100 mm x 100 mm 100 mm x 200 mm 200 mm x 100 mm 200 mm x 200 mm 300 mm x 200 mm 300 mm x 300 mm 400 mm x 200 mm 400 mm x 300 mm 400 mm x 400 mm 500 mm x 200 mm 500 mm x 300 mm 500 mm x 400 mm 600 mm x 200 mm 600 mm x 300 mm 600 mm x 400 mm 700 mm x 400 mm 800 mm x 400 mm	75 mm x 75 mm 100 mm x 100 mm 100 mm x 200 mm 200 mm x 100 mm 200 mm x 200 mm 300 mm x 200 mm 300 mm x 300 mm 400 mm x 200 mm 400 mm x 300 mm 400 mm x 400 mm 400 mm x 500 mm 400 mm x 600 mm 400 mm x 700 mm 400 mm x 800 mm	400 mm x 400 mm 600 mm x 400 mm 800 mm x 400 mm 800 mm x 600 mm 1000 mm x 600 mm 1200 mm x 800 mm	400 mm x 400 mm 500 mm x 400 mm 600 mm x 400 mm 600 mm x 600 mm 700 mm x 400 mm 700 mm x 450 mm 800 mm x 400 mm 800 mm x 450 mm 800 mm x 500 mm 800 mm x 600 mm 950 mm x 550 mm
5 years	5 years	5 years	5 years
Black	Black	Black	Black
7368100	7368150	7369000	7369100
8712285334184	8712285334207	8712285352645	8712285336126
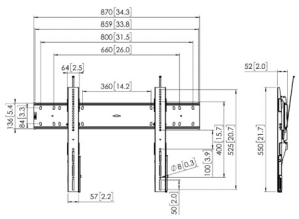	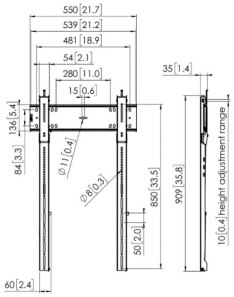	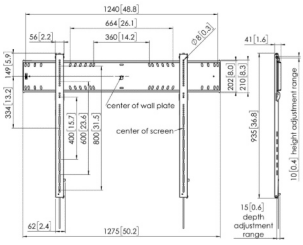	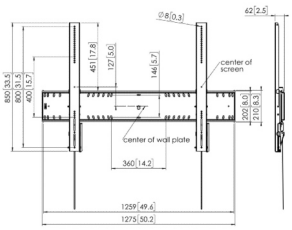

Video Wall Pop-out Mounts + Connect-it

These pop-out mounts are engineered for even faster and easier installation of LCD video walls. The pop-in/pop-out mechanism guarantees quick and easy servicing and maintenance.

Connect-it compatible

The pop-out mount can be mounted directly on the wall, making it an ideal solution for recessed single display or video wall installations. Combine the video wall pop-out mount with a Connect-it PFB 34xx Interface Bar for even faster installation and easy alignment. Perfect for installations on bumpy, uneven walls and stud walls. Unlike other Vogel's pop-out systems, this pop-out mount is compatible with the Connect-it PUC 29 Series. This makes it really easy to install a floor to ceiling, floor to wall or fixed to the floor video wall solution with pop-out mounts.

Key features

- Compatible with Vogel's Connect-it
- Always quick and easy service access
- Single-latch pop-out mechanism ensures always level pop-in/pop-out display position
- Perfect for recessed and built-in video wall installations
- TÜV-5 certified for extra safety
- Designed for LCD displays from 40" to 65"
- Suitable for landscape and portrait mounting
- VESA 200x200 to 600x800 mm

Check vogels.com for more information.

VIDEO WALL POP-OUT MOUNT - KITS

	PPM6704 Video Wall Pop-out Mount landscape	**PPM6708** Video Wall Pop-out Mount portrait
Specifications		
Max. weight load (Lbs)	99.21	99.21
Min. / Max. screen size (inch)	40 / 65	40 / 65
Orientation	Landscape / Portrait	Portrait
Min. VESA hole pattern (mm)	200 x 200	200 x 200
Max. VESA hole pattern (mm)	600 x 400	600 x 800
Guarantee		
TÜV certified	TÜV NORD	TÜV NORD
Guarantee	5 years	5 years
General		
Colour	Black	Black
Article number	7950300	7950310

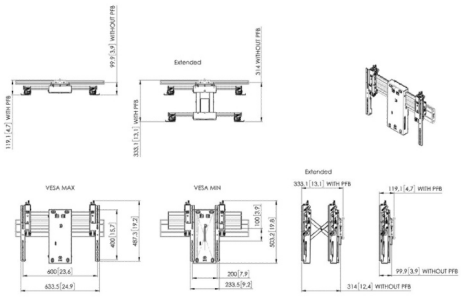

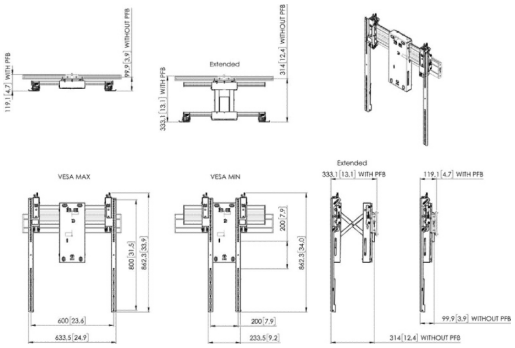

PFW 6706

Video Wall Pop-out Module

VIDEO WALL POP-OUT MODULE

Specifications	
Max. weight load (Lbs)	99.21
Min. / Max. screen size (inch)	37 / 65
Min. distance to the wall (inch)	2.64
Orientation	Landscape / Portrait
Exceptions | Remarks	Combine with PFS 35xx

Guarantee	
TÜV certified	
Guarantee	5 years

General	
Colour	Black
Article number	7267060
EAN single box	8712285345029

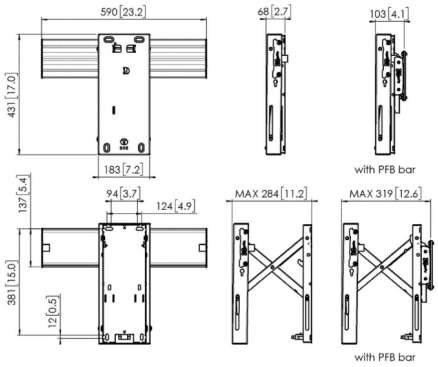

Motorized Trolley for LED and LCD

Robust trolley with formidable design

The PFTE 7120 Motorized Trolley for LED and LCD is specially designed to safely mount LED walls and LCD displays of 98" and larger. The maximum weight load is 225 kg.

The PFTE 7120 Motorized Trolley is supplied as standard with castors and adjustable legs. If the trolley is going to be used in a fixed position, mounting the supplied feet is the most attractive and practical solution. The installation is elegant and stylish, despite its size, so it enhances any modern setting. The high quality materials and beautiful finish give the trolley an upmarket appearance, and as you would expect from a Vogel's product, all the cables are neatly concealed in the housing.

Mounting the displays

The motorized trolley features a universal or custom interface which is suitable for any type of LED wall or large LCD display, irrespective of the brand.

Vogel's supplies complete matching interface kits for popular LED displays from Philips, Samsung, LG and Optoma. Check vogels.com for more LED solutions.

Key features

- Adjustable in height up to 50 cm
- TÜV and CE certified
- Mobile and/or stand alone
- Lockable cabinet
- Easy install

MOTORIZED TROLLEY LED - KITS

	TLWE78002 Motorized Trolley for Philips FHD 137BDL9115 LED Wall	**TLWE78101** Motorized Trolley for Samsung IFR/IER 1.5 mm LED Wall
Specifications		
Max. weight load (Lbs)	496.04	496.04
Min. distance to floor - center display (mm)	1075	1075
Max. distance to floor - center display (mm)	1575	1575
Motorized	•	•
Height adjustment (mm)	500	500
Guarantee		
TÜV certified	TÜV NORD	TÜV NORD
Guarantee	5 years	2 years
General		
Colour	Black	Black
Article number	7951280	7951290

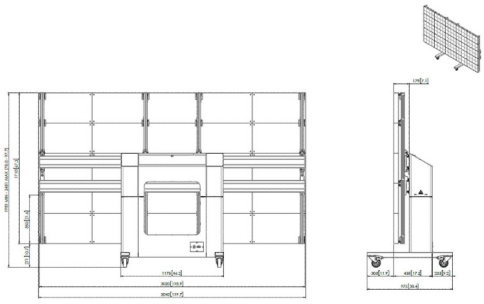

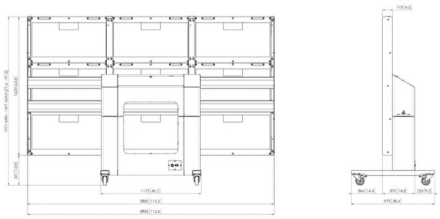

MOTORIZED TROLLEY LED - KITS

	TLWE78201 Motorized Trolley for LG 130" All-in-one LED Wall	**TLWE78302** Motorized Trolley for Optoma Quad 163" LED Wall
Specifications		
Max. weight load (Lbs)	496.04	496.04
Min. distance to floor - center display (mm)	1075	1075
Max. distance to floor - center display (mm)	1575	1575
Motorized	•	•
Height adjustment (mm)	500	500
Guarantee		
TÜV certified	TÜV NORD	TÜV NORD
Guarantee	5 years	5 years
General		
Colour	Black	Black
Article number	7951310	7951330

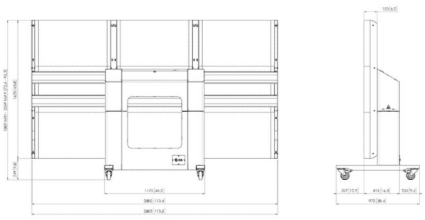

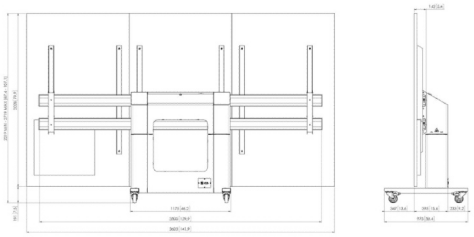

MOTORIZED TROLLEY LED/LCD

	PFTE 7120 Motorized Trolley for LED and LCD	**PLA 8902** Bracket Kit for PFTE 7120
Specifications		
Max. weight load (Lbs)	496.04	
Min./ Max. screen size (inch)	- / -	- / -
Min. distance to floor - center display (mm)	1075	
Max. distance to floor - center display (mm)	1575	
Motorized	•	
Height adjustment (mm)	500	
Guarantee		
TÜV certified	TÜV NORD	
Guarantee	5 years	5 years
General		
Colour	Black	Black
Article number	7371200	7189024
EAN single box	8712285351266	8712285351969

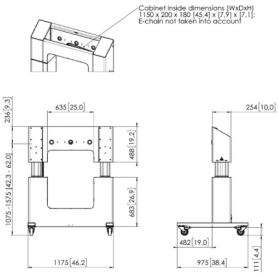

Video Conferencing Furniture

In situations where people heavily depend on video conferencing, a professional solution is an absolute necessity. It is not just choosing the right equipment that is important; the right set-up also needs careful consideration.

Attention to design and detail

Vogel's supplies various models of video conferencing furniture with ample of storage space and each with its own specific features. What they all have in common is their superior finish and quality.

Mounting your display, camera and speaker

In order to mount one or two displays, you choose a Connect-it interface bar and display interface strips to create the perfect fit (see page 11-19). Easily mount a camera/speaker onto the furniture with a holder (see page 65).

VIDEO CONFERENCING FURNITURE

	PVF 4112 Video Conferencing Furniture	**PFF 5100** Video Conferencing Furniture	**PFF 5211** Video Conferencing Furniture
Specifications			
Max. weight load (Lbs)	176.37	176.37	176.37
Max. screen size (inch)	90	55	90
Lockable	•		
Exceptions | Remarks	Not compatible with PFB 3402	Not compatible with PFB 3402	Not compatible with PFB 3402/3405/3407
Guarantee			
TÜV certified	TÜV NORD	TÜV NORD	TÜV NORD
Guarantee	5 years	5 years	5 years
General			
Colour	Silver | White	Silver	Silver
Article number	7141124 (Silver) 7141121 (White)	7321514	7321524
EAN single box	8712285330346 (Silver) 8712285330384 (White)	8712285322563	8712285326844
	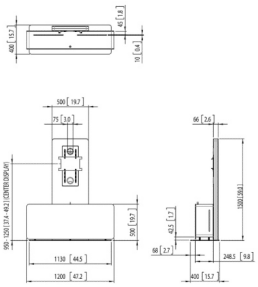	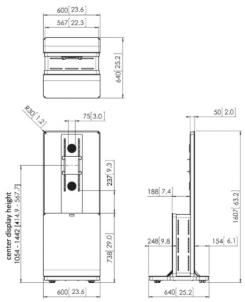	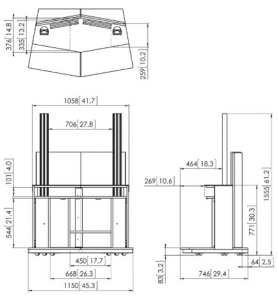

Video Conferencing Speakers

Amplified Video Conferencing Speakers

Good sound quality is critical if you want to have a productive video conference.

Vogel's developed a unique range of speakers, specially designed for video conferencing. Our speakers give you a truly high-quality voice audio experience to match the video quality.

Natural sound

The core of the loudspeaker is the built-in Digital Sound Processor (DSP), which makes the speaker sound like your video conferencing partners are actually in the room with you.

Nearly all traditional loudspeakers are optimized for music reproduction. In contrast, our speakers with a DSP are tuned for natural-sounding speech. Even the positioning of your video conferencing partners is clear due to the stereo setup. Vogel's video conferencing speakers are available in several sizes, optimized for smaller and larger rooms.

Camera/Speaker Holder

Easily mount your speaker with the camera/speaker holder (see page 65).

VIDEO CONFERENCING SPEAKERS

	PVA 4307 Video Conferencing Speaker	**PVA 4310** Video Conferencing Speaker
Specifications		
Width (mm)	700	1020
Depth (mm)	125	125
Height (mm)	91	91
Speaker output in decibel (dB)	89	92
Standby Power Consumption (W)	0.3	0.3
Remote control standard	RS-232 RS-485	RS-232 RS-485
Voltage	120 V, 60 Hz 220 V, 50 Hz 230 V, 50 Hz	120 V, 60 Hz 220 V, 50 Hz 230 V, 50 Hz
Guarantee		
Guarantee	2 years	2 years
General		
Colour	Black	Black
Article number	7243070	7243100
EAN single box	8712285333668	8712285333682

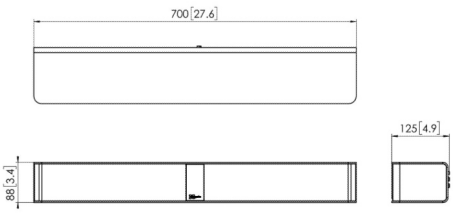

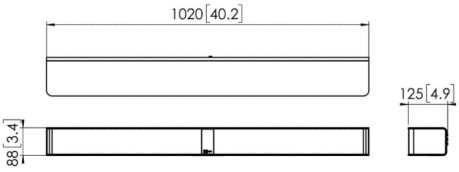

Solution for Samsung OMN-D Series

Vogel's created a retail display mount exclusively designed for the Samsung's OMN-D Series double sided displays, for both 46" and 55" sizes, to maximize this dual communication display.

Ideal solution for both ceiling and floor

Vogel's PFFC 4655 can be used to mount OM46N-D or OM55N-D. With this solution, Vogel's offers the best way to mount this display with just one product. This new retail display mounting solution includes a ceiling mount, floor mount and floor-to-ceiling mount option to suit the possibilities and preferences of the store where it is to be installed.

Mount without drilling

There are times when it is not possible to drill holes in the ceiling or floor, or you simply want the option to easily relocate the device at any time. For these cases, Vogel's also has a special base available, which does not require any drilling.

Key features

- Easy and quick installation
- Lightweight aluminium profiles
- Cable management system

SOLUTION SAMSUNG OMN-D SERIES

	PFFC 4655 Mount for Samsung OMN-D	PFF 2046 Floor Plate for Samsung OM46N-D	PFF 2055 Floor Plate for Samsung OM55N-D
Specifications			
Min./ Max. screen size (inch)	46 / 55	46 / 46	55 / 55
Depth (mm)	160	550	550
Height (mm)	2020	225	225
Guarantee			
Guarantee	5 years	5 years	5 years
General			
Colour	Black	Black	Black
Article number	7346550	7320460	7320550
EAN single box	8712285345289	8712285345548	8712285345562
	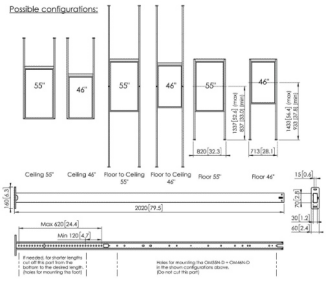	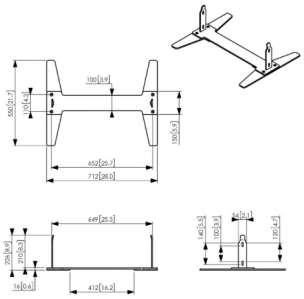	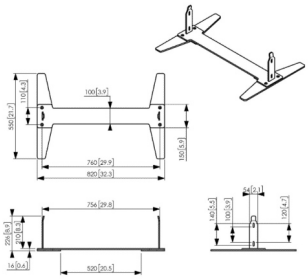

Trolleys and Stands

Superb quality and design

The series of AV trolleys are designed to provide maximum communication power or design integration. The trolley needs to be combined with the Connect-it interface bars and display interface strips.

To create a complete video conferencing solution use the Vogel's camera/speaker holders and speakers (see page 65/139).

Display mounting

In order to mount one or two displays, you choose the display interface bar and strips to create the perfect fit (see page 11-19).

Key features

- Stylish design
- Full cable management
- Suitable for video conferencing

TROLLEYS AND STAND

	PFF 2420 Floor Stand	PFT 2515 Trolley	PFT 2520 Trolley
Specifications			
Max. weight load (Lbs)	154.32	154.32	121.25
Min./ Max. screen size (inch)	32 / 65	32 / 65	32 / 65
Min. distance to floor - center display (mm)	1100	590	1130
Max. distance to floor - center display (mm)	1700	640	1770
Height adjustable (mm)	•	•	•
Guarantee			
TÜV certified	TÜV NORD	TÜV NORD	TÜV NORD
Guarantee	5 years	5 years	5 years
General			
Colour	Black	Black	Black
Article number	7324205	7325155	7325210
EAN single box	8712285331107	8712285331121	8712285331145
	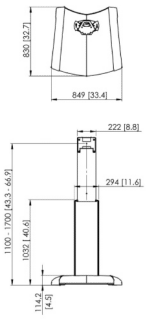	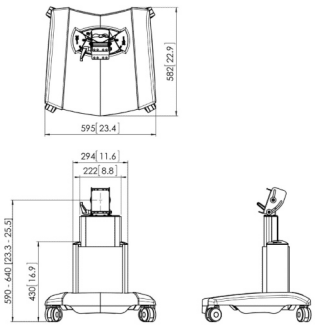	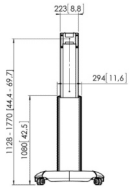

ACCESSORIES

	PFA 9033 Accessory Shelf	PFA 9034 Locking Cabinet	PFA 9052 Locking Cabinet
		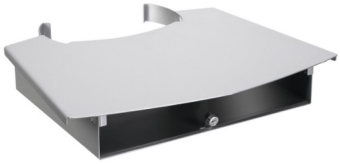	
Specifications			
Max. weight load (Lbs)	22.05	22.05	44.09
Lockable		•	•
Guarantee			
TÜV certified	TÜV NORD	TÜV NORD	TÜV NORD
Guarantee	5 years	5 years	5 years
General			
Colour	Silver	Silver	Silver
Article number	7390334	7390344	7390524
EAN single box	8712285315008	8712285315022	8712285322808

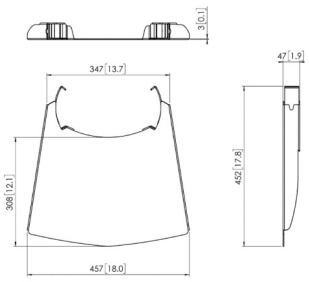

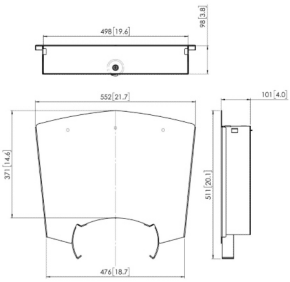

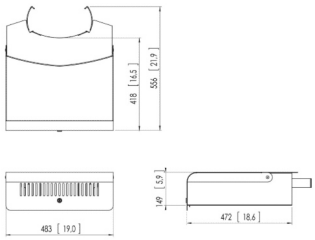

PLASMABOY ® TROLLEYS AND STAND

	PB 050 Table Stand	PB 150 Trolley	PB 175 Trolley
Specifications			
Max. weight load (Lbs)	110.23	110.23	110.23
Min./ Max. screen size (inch)	36 / 55	36 / 55	36 / 55
Max. horizontal hole pattern (mm)	670	670	670
Max. vertical hole pattern (mm)	510	510	510
Guarantee			
Guarantee	5 years	5 years	5 years
General			
Colour	Black	Black	Black
Article number	7320500	7321500	7321750
EAN single box	8712285336140	8712285336164	8712285336188
	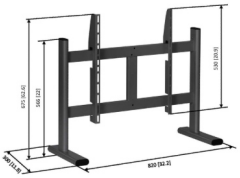		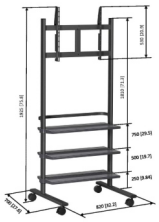

Stainless steel
Floor Stands

Stylish brushed stainless steel

These stylish brushed stainless steel floor stands can be used in many different locations like boardrooms, hotel lobbies, retail shops, custom install showrooms, car showrooms, shows and exhibitions.

Combine the floor stand with a special turn unit and Connect-it display interface bar and strips (see page 11-19), and you can easily create a perfect configuration.

The optional accessory shelf can easily be mounted to the floor stand at any desired height.

Key features

- Stylish design
- Cable management
- Modular display interface for a perfect fit

Stainless steel Series contains

- Brushed stainless steel floor stands
- Stainless steel floor mounting stand
- Stainless steel kits

FLOOR STAND KITS

	F1622RVS Floor Stand	**F1644RVS** Floor Stand
Specifications		
Max. weight load (Lbs)	88.18	88.18
Min./ Max. screen size (inch)	19 / 55	19 / 55
Max. distance to floor - center display (mm)	1587	1587
Min. VESA hole pattern (mm)	100 x 100	100 x 100
Max. VESA hole pattern (mm)	200 x 200	400 x 400
Guarantee		
TÜV certified	TÜV NORD	TÜV NORD
Guarantee	5 years	5 years
General		
Colour	Stainless Steel	Stainless Steel
Article number	7951114	7951124

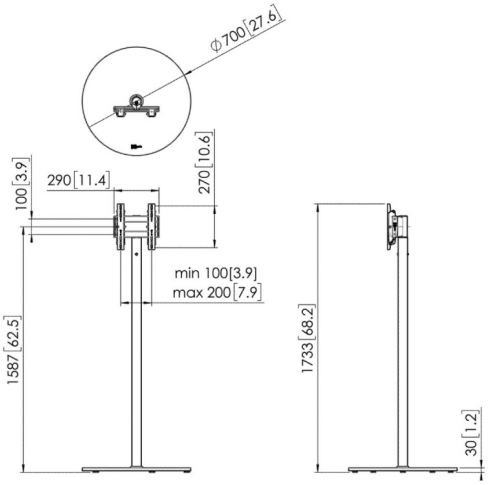

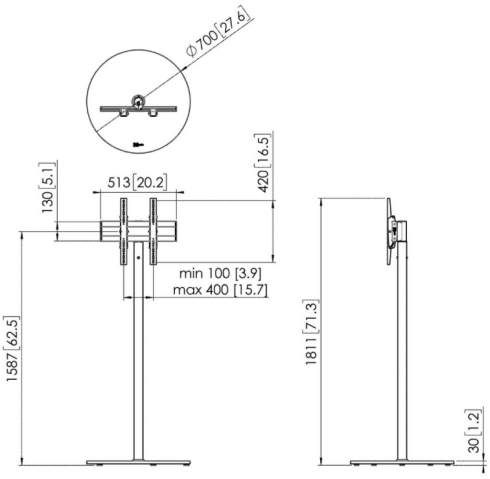

FLOOR MOUNTED KITS

	FM1622RVS Floor Stand, fixed to floor	FM1644RVS Floor Stand, fixed to floor
Specifications		
Max. weight load (Lbs)	88.18	88.18
Min./ Max. screen size (inch)	19 / 55	19 / 55
Max. distance to floor - center display (mm)	1572	1572
Min. VESA hole pattern (mm)	100 x 100	100 x 100
Max. VESA hole pattern (mm)	200 x 200	400 x 400
Guarantee		
TÜV certified	TÜV NORD	TÜV NORD
Guarantee	5 years	5 years
General		
Colour	Stainless Steel	Stainless Steel
Article number	7952044	7952054

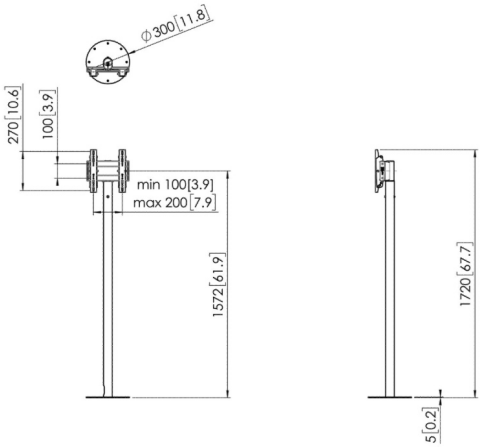

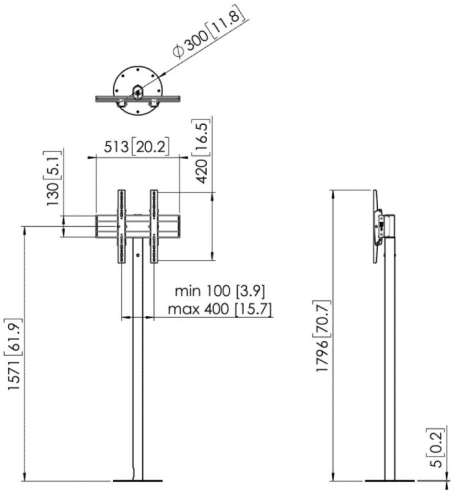

FLOOR STANDS

	PFF 1560 Floor Stand	PFA 9155 Floor Stand, fixed to floor
Specifications		
Max. weight load (Lbs)	88.18	110.23
Min./ Max. screen size (inch)	19 / 55	19 / 55
Max. distance to floor - center display (mm)	1587	1571
Guarantee		
TÜV certified	TÜV NORD	TÜV NORD
Guarantee	5 years	5 years
General		
Colour	Stainless Steel	Stainless Steel
Article number	7321604	7291554
EAN single box	8712285345449	8712285350788
	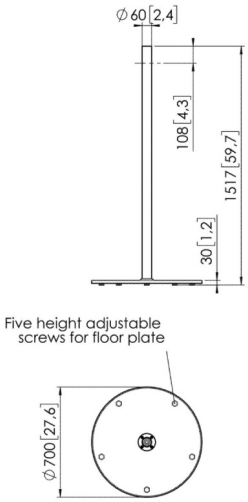	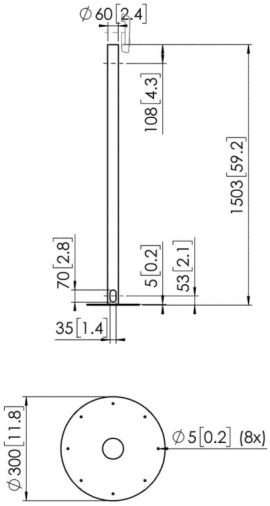

FLOOR STANDS INTERFACE AND ACCESSORY

	PFA 9148 Turn Unit	**PFA 9038** Accessory Shelf
Specifications		
Max. weight load (Lbs)	88.18	22.05
Turn	Up to 128°	
Guarantee		
TÜV certified	TÜV NORD	
Guarantee	5 years	5 years
General		
Colour	Black	Silver
Article number	7291480	7390384
EAN single box	8712285345241	8712285316081

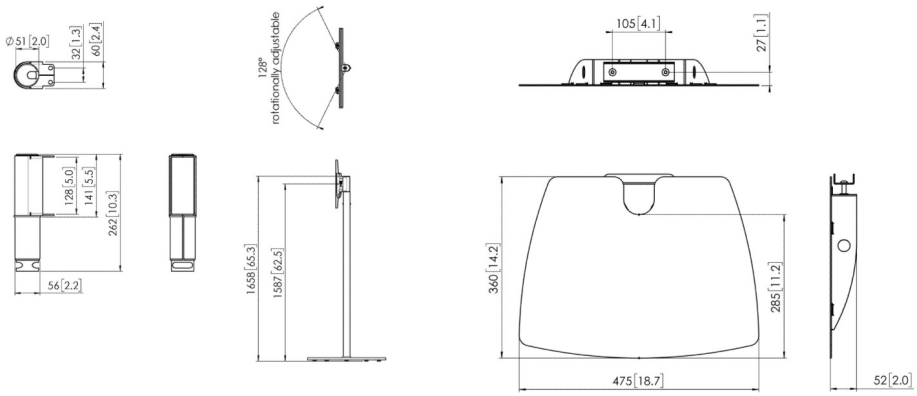

Outdoor solutions for LG XE4F Series

The ideal outdoor display solution

LG has developed a 49" and 55" all-in-one outdoor display with a slim and robust design. By combining this display with a Vogel's mounting solution, the entire set-up will be watertight and the screen will be able to withstand extreme temperatures from -30°C to +50°C. The combination of the LG XE4F Series for outdoors and Vogel's mounting solutions can be used for a wide range of applications.

Key features

- Perfectly suitable for outdoor environments
- Anti-corrosion treatment for most extreme weather conditions
- Display mounting in landscape and portrait position
- Theft prevention
- Easy installation

OUTDOOR KITS - FLOOR STAND

	OFMLG49XE4F Outdoor Floor Stand for LG 49XE4F	**OFMLG55XE4F** Outdoor Floor Stand for LG 55XE4F
Specifications		
Max. weight load (Lbs)	77.16	99.21
Screen size (inch)	49	55
Height (mm)	2074	2108
Min. distance to floor - center display (mm)	1700	1700
Orientation	Landscape / Portrait	Landscape / Portrait
Guarantee		
TÜV certified	TÜV NORD	TÜV NORD
Guarantee	2 years	2 years
General		
Colour	Black	Black
Article number	7951130	7951140

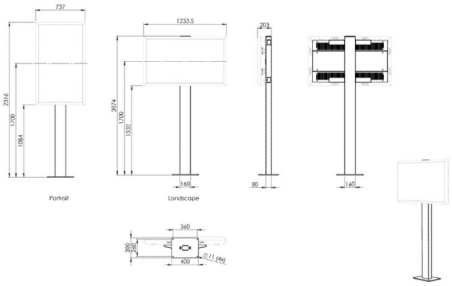

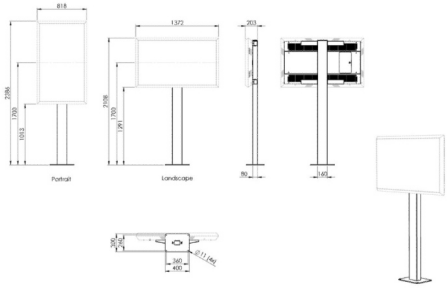

OUTDOOR KITS - WALL

	OWMLG49XE4F Outdoor Wall Mount for LG 49XE4F	OWMLG55XE4F Outdoor Wall Mount for LG 55XE4F
Specifications		
Max. weight load (Lbs)	77.16	99.21
Screen size (inch)	49	55
Orientation	Landscape / Portrait	Landscape / Portrait
Guarantee		
TÜV certified	TÜV NORD	TÜV NORD
Guarantee	2 years	2 years
General		
Colour	Black	Black
Article number	7951110	7951120

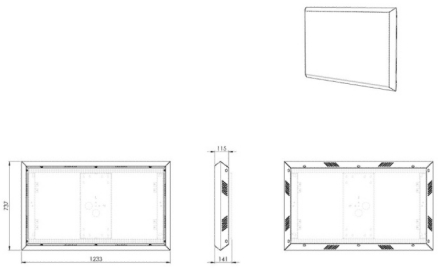

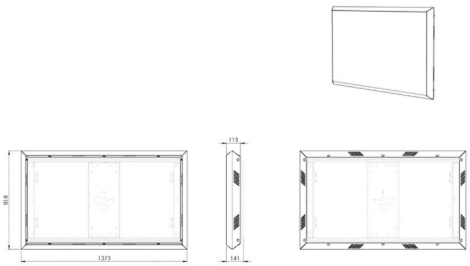

WALL MOUNTS

	POW 1601 Outdoor Wall Mount for LG 49XE4F	POW 1602 Outdoor Wall Mount for LG 55XE4F
Specifications		
Max. weight load (Lbs)	77.16	99.21
Screen size (inch)	49	55
Orientation	Landscape / Portrait	
Min. distance to the wall (inch)	2.95	2.95
Guarantee		
TÜV certified	TÜV NORD	TÜV NORD
Guarantee	5 years	5 years
General		
Colour	Black	Black
Article number	7216010	7216020
EAN single box	8712285351921	8712285351945

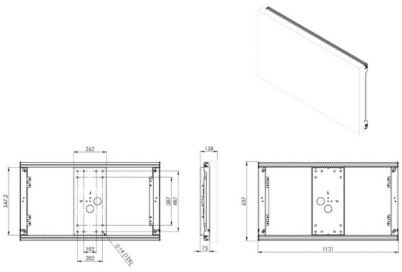

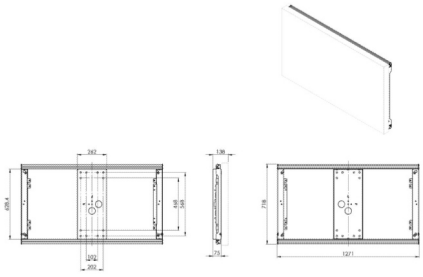

FRAMES

	POA 9601 Outdoor frame for LG 49XE4F	POA 9602 Outdoor frame for LG 55XE4F
Specifications		
Screen size (inch)	49	55
Guarantee		
Guarantee	2 years	2 years
General		
Colour	Black	Black
Article number	7296010	7296020
EAN single box	8712285351884	8712285351907

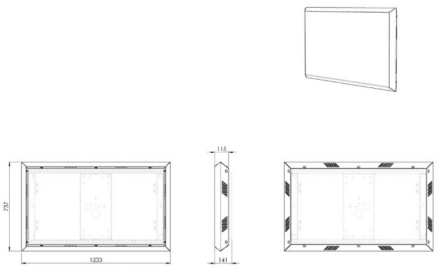

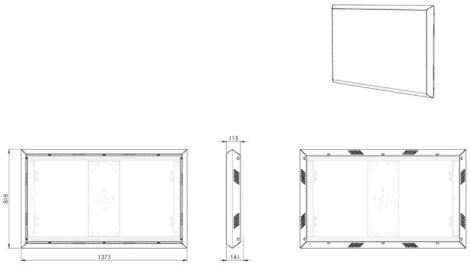

FLOOR STANDS

	POF 7601 Outdoor Floor Stand for LG 49XE4F	POF 7602 Outdoor Floor Stand for LG 55XE4F
Specifications		
Screen size (inch)	49	55
Height (mm)	2074	2074
Min. distance to floor - center display (mm)	1700	1700
Guarantee		
Guarantee	2 years	2 years
General		
Colour	Black	Black
Article number	7276010	7276020
EAN single box	8712285351983	8712285352003

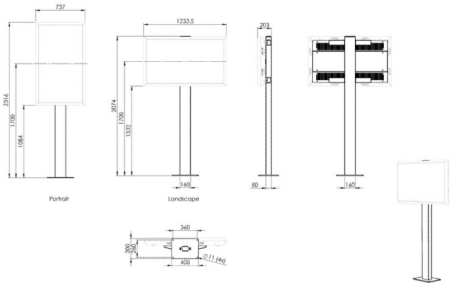

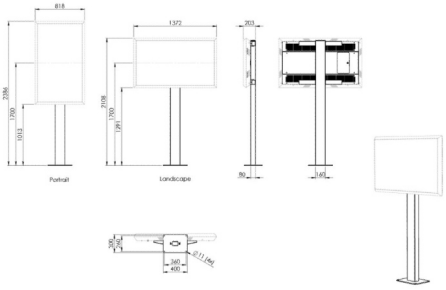

Monitor Mounts

Professional mounting with a Monitor Mount

By securing your computer monitor to a Vogel's monitor mount, not only do you save space on your desk, but you can also adjust the monitor's position to precisely match your personal preferences.

Multiple mounting options

The Flexmount™ allows you to install any monitor mount in up to six different ways without having to purchase extra accessories: desk clamp, thru-desk, wall, grommet hole, side bolt and reverse wall.

Key features

- Flexible viewing height
- Movable arm for minimal space on your desk
- Tilt and rotate your monitor in any direction
- Ergonomic design
- Easy to install
- VESA 75x75, 100x100 mm

MONITOR MOUNTS

	PFD 8522 Monitor Mount static	PFD 8523 Monitor Mount static	PFD 8541 Monitor Mount dynamic
Specifications			
Max. weight load (Lbs)	28.66	28.66	12.57
Min./ Max. screen size (inch)	10 / 29	10 / 29	10 / 29
Gas spring	-	-	•
Exceptions | Remarks	Max. desktop thickness: 83 mm	Max. desktop thickness: 83 mm	Max. desktop thickness: 83 mm
Guarantee			
Guarantee	10 years	10 years	10 years
General			
Colour	Silver	Silver	Silver | White
Article number	7185224	7185234	7185414 (Silver) 7185411 (White)
EAN single box	8712285318344	8712285318368	8712285318405 (Silver) 8712285338922 (White)
	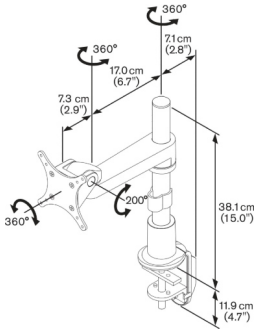	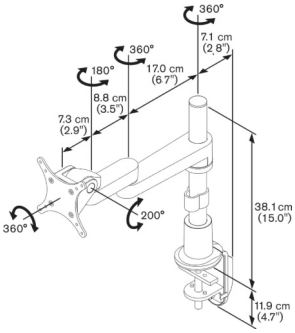	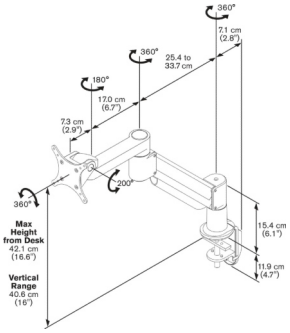

PFD 8543	PFA 9102	PFA 9125
Monitor Mount dynamic	Dual Monitor Adapter for PFD Mounts	Dual Monitor Mount Adapter
24.25	26.46	
10 / 29	10 / 24	- / -
•		
Max. desktop thickness: 83 mm	Max. monitor width: 580 mm	Not compatible with PFD 8522/8523
10 years	10 years	5 years
Silver | White	Silver	Silver | White
7185434 (Silver) 7185431 (White)	7191024	7291254 (Silver) 7291251 (White)
8712285318429 (Silver) 8712285338953 (White)	8712285318382	8712285330421 (Silver) 8712285338977 (White)
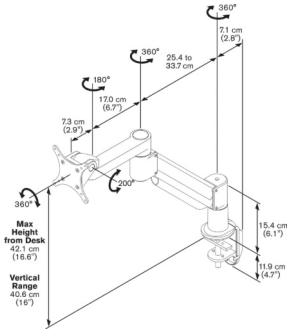	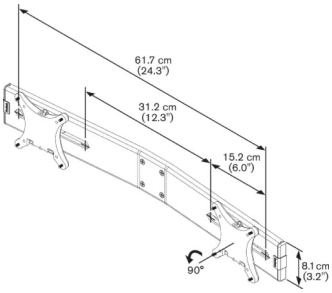	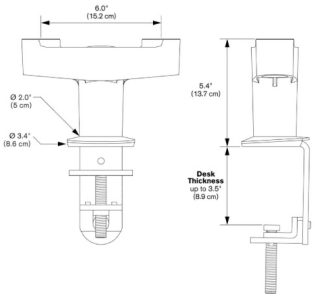

TabLock® Tablet Holders

Professional enclosures for your tablet

More often, iPads or Android tablets can be found in public areas, such as airports, museums and showrooms. They are ideal for viewing video files, product information and for interactive communication.

In order to use a tablet in public, it needs a secure enclosure that gives accessibility for users, while simultaneously providing protection against theft or unauthorised use. Vogel's has developed the perfect tablet solution: TabLock®.

Several versions for iPad and Galaxy Tab

Most models of the Vogel's TabLock (for Apple iPads and Samsung Galaxy Tabs) have two versions. One version has an accessible home button, which allows users to close the current application and start another. The other version has the home button completely hidden. The pinopenings can be used to turn the tablet on or off, and to adjust the volume. The Lock & Key system, which is a unique locking mechanism within the TabLock, prevents theft but still gives quick access to the tablet.

TabLock® for iPad and Galaxy Tab

Key features

- Theft preventing
- Quick and easy installation
- Direct wall mounting is possible
- Internal cable management
- Pin holes for power and volume buttons to prevent unauthorized operation (depending on the model)
- Wifi, 3G/4G/5G and bluetooth functionality are unimpeded
- Portrait or landscape position possible
- VESA 100x100 mm mounting holes for mounting the TabLock on all Vogel's VESA compatible mounts

Solutions for latest models

We have a secure tablet solution available for the most common tablets from Apple and Samsung.

Please check vogels.com for latest models.

Universal TabLock®

Universal Tablet Holder

for your tablet

Tablets are great for providing information in public spaces, such as retail shops, museums, showrooms and exhibitions. However, they are easy to damage or steal, and there are so many different versions. Vogel's developed the Universal TabLock® enclosure to protect your tablet while still allowing access to the touch screen. Because of the universal design, the Universal TabLock is perfect for several models of iPads, Galaxy Tabs and other tablets up to 10 inch.

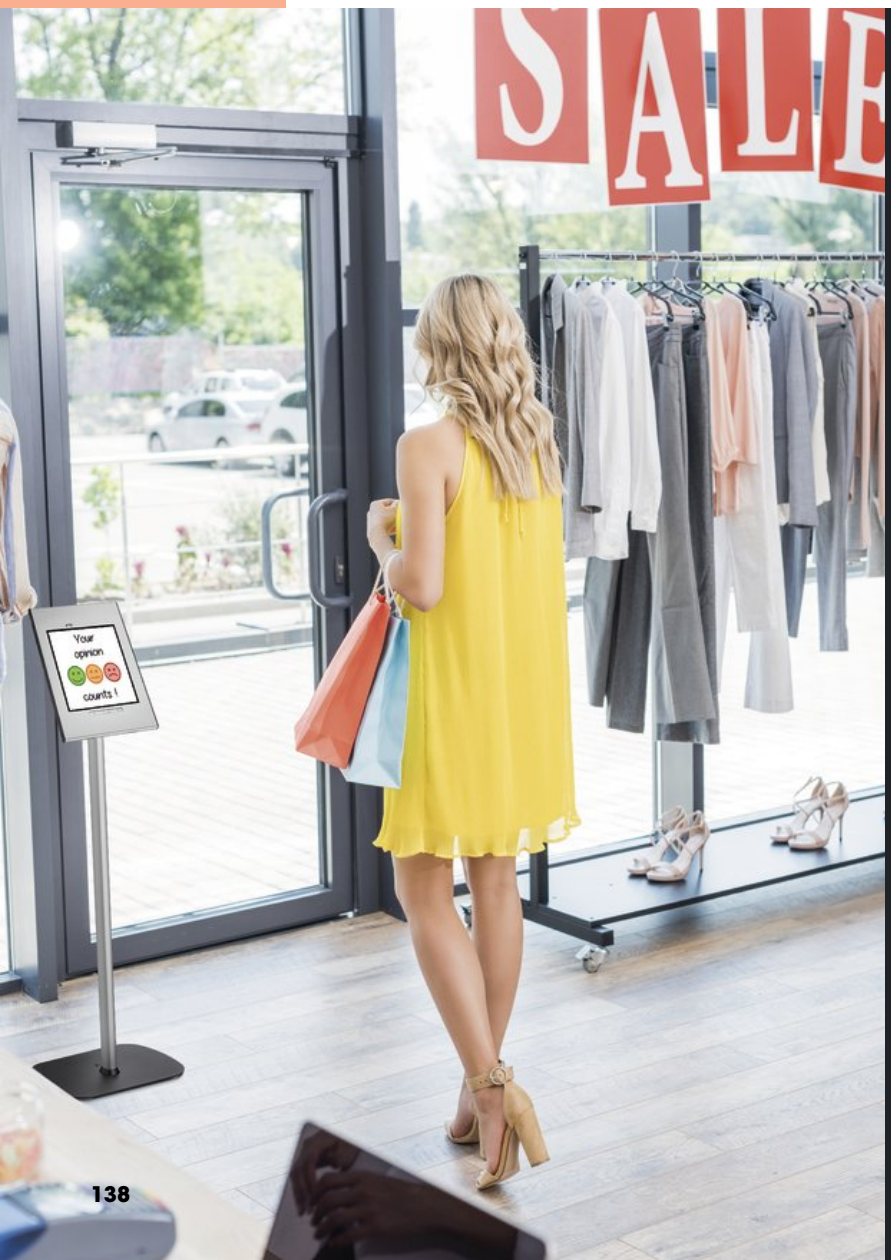

Sleek design and high-quality materials

A safe tablet holder does not have to be clunky and difficult to use. The sleek design of the Vogel's Universal TabLock fits in with the high-end image you want to provide for your customers. It is easy to install and use, and does not compromise the user experience. The Universal TabLock is made of high-quality materials: 3 mm steel and high-end aluminium. The enclosure can be mounted directly to the wall, or to any compatible Vogel's mounts. The top panel closes with a unique push-in lock, securing the tablet and preventing access to the mounting screws.

PTS 2010

Universal TabLock

UNIVERSAL TABLOCK®

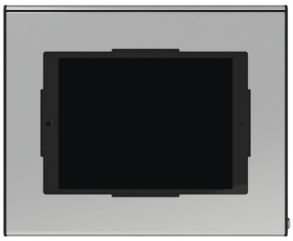

Specifications	
Max. weight load (Lbs)	6.61
Hole pattern (VESA)	100 mm x 100 mm

Guarantee	
Guarantee	5 years

General	
Colour	Silver
Article number	7495264
EAN single box	8712285331183

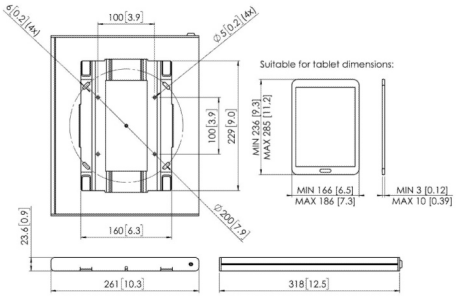

TABLOCK® ACCESSORIES

	PTA 3101 Floor Stand	**PTA 3102** Table Stand
Specifications		
Max. weight load (Lbs)	6.61	6.61
Min./ Max. screen size (inch)	7 / 26	7 / 26
Tilt	Tilt up to 90°	Tilt up to 90°
Cable management	Integrated cable management	Integrated cable management
Max. distance to floor - center display (mm)	1000	260
Hole pattern (VESA)	50 mm x 50 mm 75 mm x 75 mm 100 mm x 100 mm	50 mm x 50 mm 75 mm x 75 mm 100 mm x 100 mm
Guarantee		
TÜV certified	TÜV NORD	TÜV NORD
Guarantee	5 years	5 years
General		
Colour	Black	Black
Article number	7493110	7493120
EAN single box	8712285334726	8712285334740

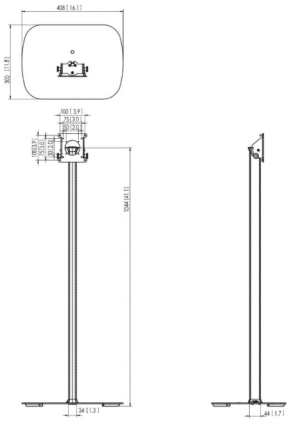

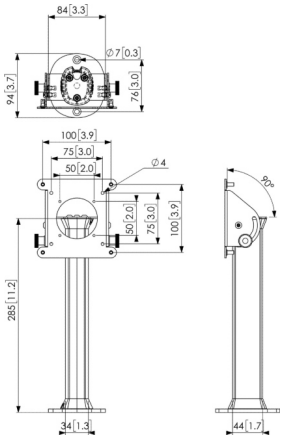

PTA 3103 Wall/Table Mount	PTA 3105 Table Stand with foot plate
22.05	6.61
7 / 26	7 / 26
	Tilt up to 90°
	Integrated cable management
	260
50 mm x 50 mm 75 mm x 75 mm 100 mm x 100 mm	50 mm x 50 mm 75 mm x 75 mm 100 mm x 100 mm
5 years	5 years
Black	Black
7493130	7493150
8712285335242	8712285334764
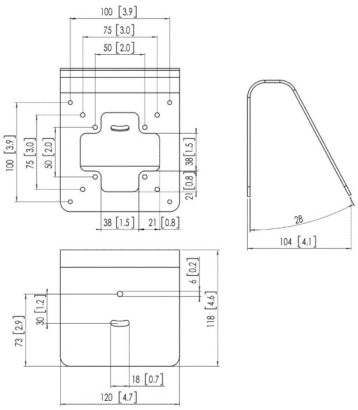	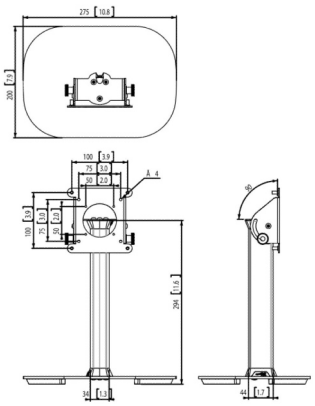

Projector Lift Systems

Projector Ceiling Lift systems

The PPL Ceiling Lift systems are the perfect solution for integrating projectors into ceilings in board rooms, home cinemas, auditoriums and conference halls. Not only is the projector neatly hidden, it is also theft delaying. The lifts run whisper quiet and offer two very easy and accurate adjustable positions: top and show.

Key features

- Lightweight and solid construction
- Adjustable top position
- Lift motion with an accuracy of < 1 mm
- Good product price ratio
- Easy to control
- Durable
- Easy to install

PROJECTOR LIFT SYSTEMS

	PPL 2035 Projector Lift System	PPL 2040 Projector Lift System
	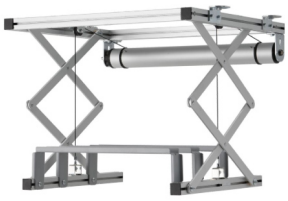	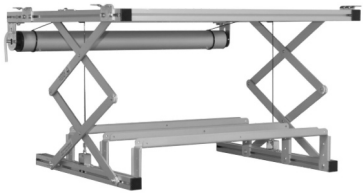
Specifications		
Max. weight load (Lbs)	33.07	66.14
Depth (mm)	554	680
Width (mm)	655	820
Min. distance to ceiling (mm)	130	140
Max. distance to ceiling (mm)	480	540
Voltage	220 V, 50 Hz 230 V, 50 Hz	220 V, 50 Hz 230 V, 50 Hz
Max. projector size	400 x 450 mm	570 x 590 mm
Guarantee		
TÜV certified		
Guarantee on Electrical Parts	2 years	2 years
General		
Colour	Silver	Silver
Article number	7020354	7020404
EAN single box	8712285338342	8712285350801

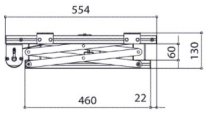

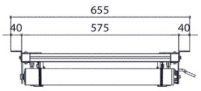

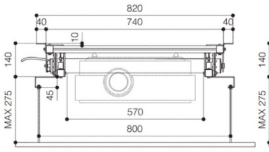

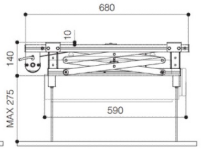

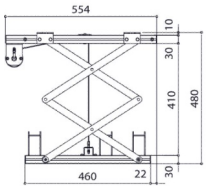

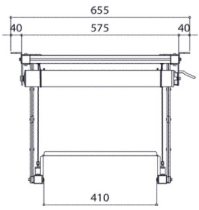

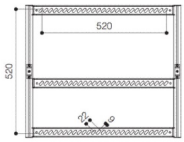

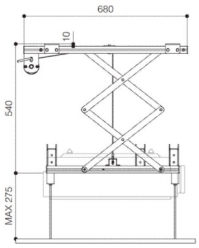

PROJECTOR LIFT SYSTEMS

	PPL 2100 Projector Lift System	**PPL 2170** Projector Lift System
Specifications		
Max. weight load (Lbs)	66.14	66.14
Depth (mm)	554	554
Width (mm)	575	575
Min. distance to ceiling (mm)	155	255
Max. distance to ceiling (mm)	970	1979
Voltage	220 V, 50 Hz 230 V, 50 Hz	220 V, 50 Hz 230 V, 50 Hz
Max. projector size	570 x 600 mm	570 x 600 mm
Guarantee		
TÜV certified	TÜV NORD	TÜV NORD
Guarantee on Electrical Parts	2 years	2 years
General		
Colour	Silver	Silver
Article number	7021004	7021704
EAN single box	8712285338380	8712285338427

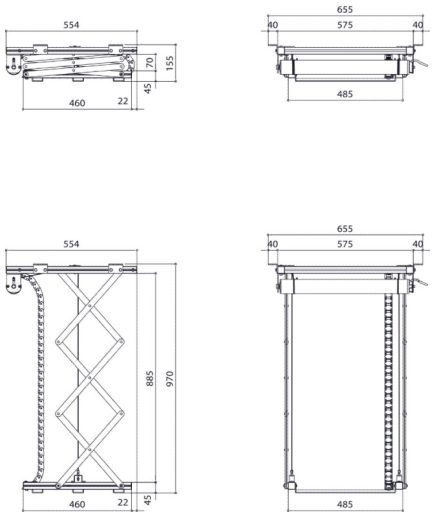

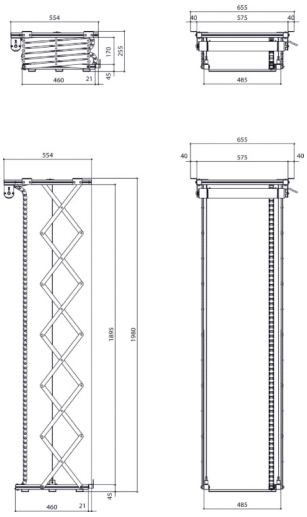

PPL 2500

Projector Lift System

154.32
890
790
705
5705
230 V, 50 Hz
570 x 600 mm

2 years

Black
7025000
8712285338465

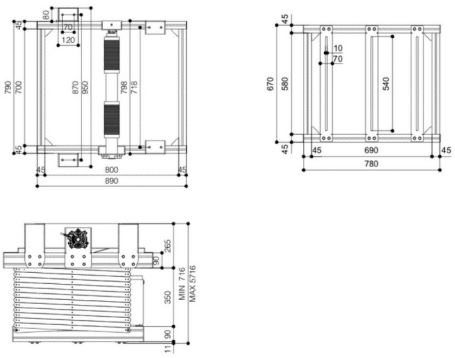

ACCESSORIES

	PPA 901 Ceiling Tile Holder	PPA 902 RF Remote Control kit	PPA 903 Control Pad for RF Remote Control Kit
		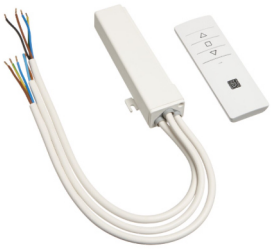	
Specifications			
Voltage		220 V, 50 Hz 230 V, 50 Hz	220 V, 50 Hz 230 V, 50 Hz
Width (mm)	600		
Exceptions | Remarks	Not compatible with PPL 2500	Not compatible with PPL 2500	Not compatible with PPL 2500
Guarantee			
Guarantee	2 years	2 years	2 years
General			
Colour	White	White	White
Article number	7099011	7099021	7099081
EAN single box	8712285338182	8712285338205	8712285338243

PPA 904	PPA 905
Low Voltage Contact	Interface switch 12V
220 V, 50 Hz 230 V, 50 Hz	220 V, 50 Hz 230 V, 50 Hz
Not compatible with PPL 2500	Not compatible with PPL 2500
2 years	2 years
White	Silver
7099041	7099054
8712285338267	8712285338304

Projector Ceiling Mounts

Vogel's offers a complete range of projector ceiling mounts. These projector mounts are especially designed for the latest generation projectors weighing up to 30 kg. The range includes basic projector ceiling mounts and height adjustable kits with telescopic poles.

Universal projector interface

All mounts come with a universal projector interface. This projector interface is equipped with fine-tune adjustability for precise alignment to the projection surface. Once aligned, the projector stays in position. Turning the unique friction ring will eliminate all play from the interface connections, making the mount a solid and very stable solution.

Height adjustable Projector Ceiling Mount kits

The height adjustable projector ceiling mount kits can be used when the height of the ceiling is not known or when flexibility is required. These mounts come in three lengths offering variable height adjustment from 400 to 1350 mm. This range of projector ceiling mounts is suitable for mounting to flat and inclined ceilings up to 90°. The CIS® Cable Inlay System runs the full length of the pole and even allows for cable routing after installation.

PROJECTOR CEILING MOUNTS

	PPC 1500 Projector Ceiling Mount	**PPC 2500** Projector Ceiling Mount
Specifications		
Max. weight load (Lbs)	44.09	66.14
Range (diameter)	30 - 337 mm	30 - 410 mm
Min. distance to ceiling (mm)	124	124
Max. distance to ceiling (mm)	124	124
Tilt	Tilt up to 15°	Tilt up to 15°
Exceptions | Remarks	Can be mounted directly to ceiling	Can be mounted directly to ceiling
Guarantee		
TÜV certified	TÜV NORD	TÜV NORD
Guarantee	5 years	5 years
General		
Colour	Silver | White	Silver
Article number	7015014 (Silver) 7015001 (White)	7025004
EAN single box	8712285325069 (Silver) 8712285325144 (White)	8712285325229
	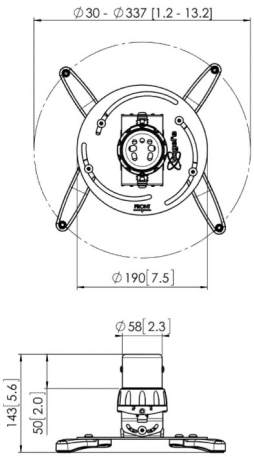	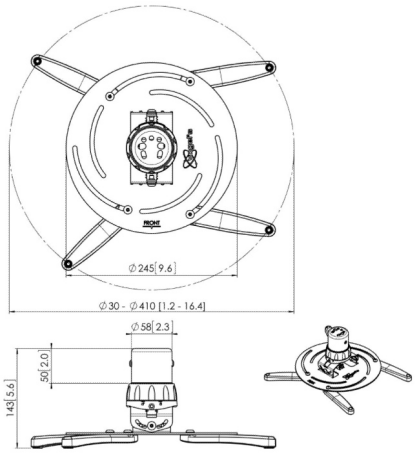

PROJECTOR CEILING MOUNTS

	PPC 1540 Projector Ceiling Mount	**PPC 1555** Projector Ceiling Mount
Specifications		
Max. weight load (Lbs)	44.09	44.09
Range (diameter)	30 - 337 mm	30 - 337 mm
Min. distance to ceiling (mm)	400	550
Max. distance to ceiling (mm)	550	850
Tilt	Tilt up to 15°	Tilt up to 15°
Exceptions | Remarks		
Guarantee		
TÜV certified	TÜV NORD	TÜV NORD
Guarantee	5 years	5 years
General		
Colour	Silver | White	Silver | White
Article number	7015404 (Silver) 7015401 (White)	7015554 (Silver) 7015551 (White)
EAN single box	8712285325083 (Silver) 8712285325168 (White)	8712285325106 (Silver) 8712285325182 (White)

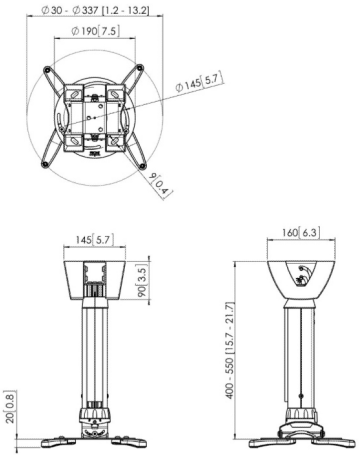

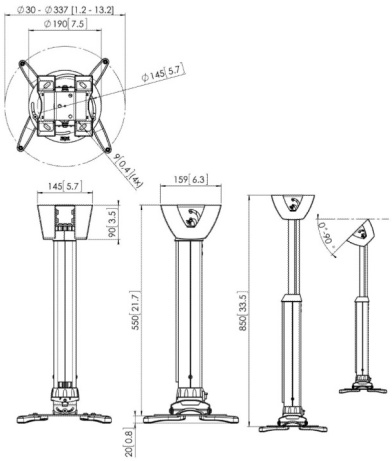

PPC 1585 Projector Ceiling Mount	PPC 2540 Projector Ceiling Mount	PPC 2555 Projector Ceiling Mount
44.09	66.14	66.14
30 - 337 mm	30 - 410 mm	30 - 410 mm
850	400	550
1350	550	850
Tilt up to 15°	Tilt up to 15°	Tilt up to 15°
5 years	5 years	5 years
Silver | White	Silver	Silver
7015854 (Silver) 7015851 (White)	7025404	7025554
8712285325120 (Silver) 8712285325205 (White)	8712285325243	8712285325267
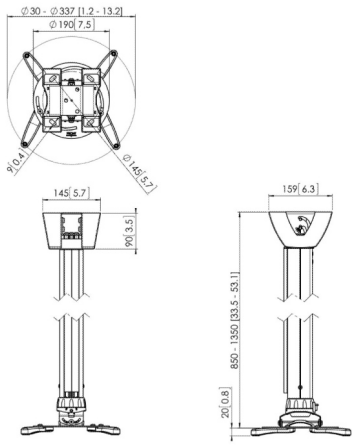	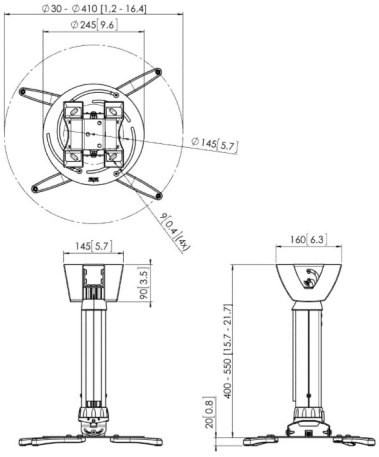	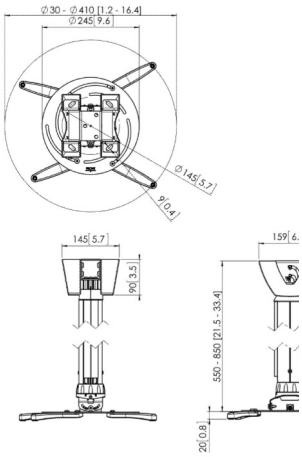

PROJECTOR CEILING MOUNTS

PPC 2585

Projector Ceiling Mount

Specifications	
Max. weight load (Lbs)	66.14
Range (diameter)	30 - 410 mm
Min. distance to ceiling (mm)	850
Max. distance to ceiling (mm)	1350
Tilt	Tilt up to 15°
Exceptions | Remarks	

Guarantee	
TÜV certified	
Guarantee	5 years

General	
Colour	Silver
Article number	7025854
EAN single box	8712285325281

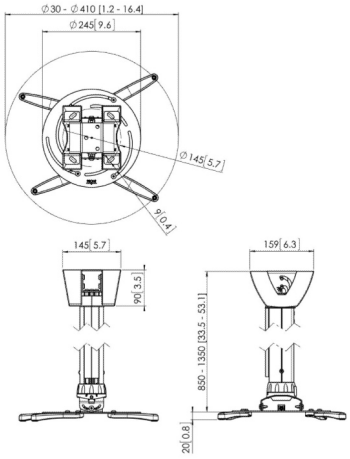

ACCESSORIES

	PPA 310 Projector anti-theft housing	PPA 320 Projector anti-theft housing
Specifications		
Height (mm)	264	323
Width (mm)	341	539
Depth (mm)	475	515
Max. projector size	410 x 410 x 130 mm	510 x 460 x 180 mm
Exceptions | Remarks	Can be mounted directly to ceiling	Can be mounted directly to ceiling
Guarantee		
Guarantee	5 years	5 years
General		
Colour	Silver	Silver
Article number	7093104	7093204
EAN single box	8712285322709	8712285322723

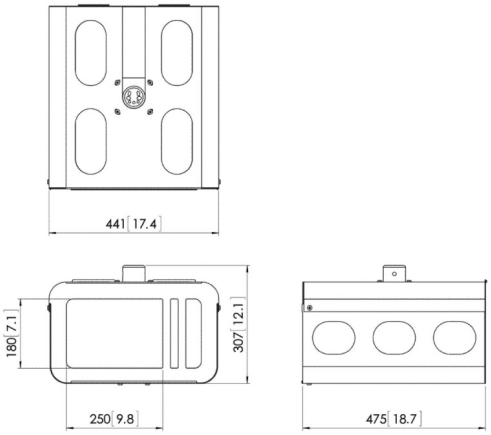

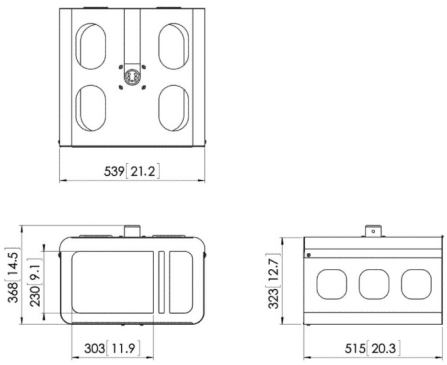

Type nr.	Pag.
C	
C0844	35
C1544	35
C3044	35
CD1564	37
CD1584	38
CD3064	37
CD3084	38
CT0844	36
CT1544	36
CT240811	27
CT240822	28
CT240844	29
CT241511	27
CT241522	28
CT241544	29
CT242211	27
CT242222	28
CT242244	29
CT243011	27
CT243022	28
CT243044	29
CT3044	36
CVW2255	75
CVW3347	75
CVW3355	75
F	
F1544	50
F1622RVS	123
F1644RVS	123
F1844	50
F2044	50
FCVW2255	74
FCVW3347	74
FCVW3355	74
FD1564	51
FD1584	52
FD1864	51
FD1884	52
FD2064	51
FD2084	52
FM1544	53
FM1622RVS	124
FM1644RVS	124
FM1844	53
FM2044	53
FMVW2255	73
FMVW3347	73
FMVW3355	73
FVW2255	71
FVW3347	71
FVW3355	71
I	
INT8001	89
INT8101	89
INT8201	90
INT8301	90
O	
OFMLG49XE4F	128
OFMLG55XE4F	128
OWMLG49XE4F	129
OWMLG55XE4F	129
P	
PB 050	121
PB 150	121
PB 175	121
PFA 9033	120
PFA 9034	120
PFA 9038	126
PFA 9052	120
PFA 9102	135
PFA 9103	44
PFA 9104	20, 85
PFA 9107	45
PFA 9108	45
PFA 9109	21
PFA 9112	66
PFA 9113	66
PFA 9114	68
PFA 9115	62
PFA 9116	62
PFA 9120	62
PFA 9121	63
PFA 9122	21
PFA 9124	68
PFA 9125	135
PFA 9126	20
PFA 9127	43, 69
PFA 9128	85
PFA 9129	77
PFA 9130	77
PFA 9132	78
PFA 9141	83
PFA 9142	83
PFA 9143	84
PFA 9144	84
PFA 9145	20
PFA 9148	126
PFA 9149	33
PFA 9155	125
PFA 9156	84
PFA 9159	63
PFA 9160	63
PFA 9161	63
PFA 9162	64
PFA 9163	64
PFA 9164	64
PFA 9165	67
PFA 9166	67
PFA 9168	21
PFB 3402	12, 80
PFB 3405	12, 80
PFB 3407	13, 80
PFB 3409	13, 80
PFB 3411	13, 81
PFB 3419	14, 81
PFB 3427	14, 81
PFB 3433	15, 81
PFC 555	47
PFC 585	47
PFD 8522	134
PFD 8523	134
PFD 8541	134
PFD 8543	135
PFF 1560	125
PFF 2046	117
PFF 2055	117
PFF 2420	119
PFF 5100	113
PFF 5211	113
PFF 7020	58
PFF 7030	58
PFF 7040	59
PFF 7060	59
PFF 7070	59
PFF 7920	77
PFF 7965	78
PFFC 4655	117
PFI 3015	32
PFI 3045	32
PFS 3204	16
PFS 3208	16
PFS 3302	17
PFS 3304	17
PFS 3306	17
PFS 3308	18
PFS 3311	18
PFS 3504	19, 82
PFS 3508	19, 82
PFT 2515	119
PFT 2520	119
PFT 8520	60
PFT 8530	60
PFT 8920	77
PFTE 7120	111
PFW 1030	93
PFW 1040	93
PFW 2020	95
PFW 2030	95
PFW 2040	95
PFW 3030	97
PFW 3040	97
PFW 4200	99
PFW 4210	100
PFW 4500	99
PFW 4510	100
PFW 4700	99
PFW 4710	100
PFW 6400	102
PFW 6410	102
PFW 6706	106
PFW 6800	102
PFW 6810	103
PFW 6815	103
PFW 6900	103
PFW 6910	103
PLA 8401	88
PLA 8800	88
PLA 8902	111
PLM 8030	88
PLS 8001	88
POA 9601	131
POA 9602	131
POF 7601	132
POF 7602	132
POW 1601	130
POW 1602	130
PPA 310	153
PPA 320	153
PPA 901	146
PPA 902	146
PPA 903	146
PPA 904	147
PPA 905	147
PPC 1500	149
PPC 1540	150
PPC 1555	150
PPC 1585	151
PPC 2500	149
PPC 2540	151
PPC 2555	151
PPC 2585	152
PPL 2035	143
PPL 2040	143
PPL 2100	144
PPL 2170	144
PPL 2500	145
PPM6704	105
PPM6708	105
PTA 3101	140
PTA 3102	140
PTA 3103	141
PTA 3105	141
PTS 2010	139
PUA 9503	44
PUA 9504	45
PUA 9507	43, 67
PUA 9510	33
PUA 9515	33
PUA 9516	33
PUC 1011	24
PUC 1045	30
PUC 1051	30
PUC 1060	40
PUC 1065	40
PUC 1070	40
PUC 1080	41
PUC 1090	41
PUC 2108	24
PUC 2115	25
PUC 2130	25
PUC 2408	31
PUC 2415	31
PUC 2422	31
PUC 2430	31
PUC 2508	42
PUC 2515	42
PUC 2530	42
PUC 2715	61
PUC 2718	61
PUC 2720	61
PUC 2920	79
PUC 2927	79
PUC 2933	79
PVA 4307	115
PVA 4310	115
PVA 5050	65
PVA 5070	65
PVF 4112	113
T	
T1544	54
T1844	54
T2044	54
TD1564	56
TD1584	57
TD1864	56
TD1884	57
TD2064	56
TD2084	57
TLWE78002	109
TLWE78101	109
TLWE78201	110
TLWE78302	110
TVW2255	72
TVW3347	72
TVW3355	72

Follow Vogel's:

/Vogels/Experience /Vogels/Experience /company/vogels /Vogels/Experience /Vogels/Experience

PX 70541 - 2022-2023/02 ©Vogel's Holding BV. All rights reserved. Subject to printing errors, technical and price amendments.

Disclaimer: While every effort is made to ensure the accuracy of the information provided, Vogel's shall not be held responsible for any errors. This also applies to mistakes or omissions in respect of prices or measurements. Not all products are available in every country.

Vogel's. For Sure.